Refrigerated Air Dryers

Standard temperature air inlet type
[Rated inlet air temperature: 35, 40°C]

Series IDF

High temperature air inlet type
[Rated inlet air temperature: 50, 55°C]

Series IDU

Series IDF/IDU

SMC

CAT.ES30-8D

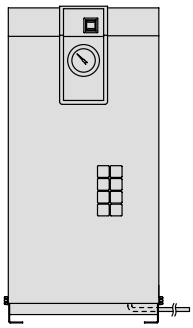

Complies with CFC restrictions

Refrigerated Air Dryers

Series IDF/IDU

1. Standard Products

Series IDF

Standard temperature air inlet type
Rated inlet air temperature: 35, 40°C

Model	Rated inlet condition	Air flow capacity m³/min (ANR) 50 Hz	Air flow capacity m³/min (ANR) 60 Hz	Applicable air compressor (kW)	Refrigerant	Port size	Page
IDF1E	35°C, 0.7 MPa	0.1	0.12	0.75	R134a (HFC)	Rc 3/8	P.3 to 6
IDF2E		0.2	0.235	1.5			
IDF3E		0.32	0.37	2.2			
IDF4E		0.52	0.57	3.7		Rc 1/2	
IDF6E		0.75	0.82	5.5		Rc 3/4	
IDF8E		1.22	1.32	7.5			
IDF11E		1.65	1.82	11			
IDF15E		2.8	3.1	15		Rc 1	
IDF22E		3.9	4.3	22	R407C (HFC)	R 1	P.7 to 9
IDF37E		5.7	6.1	37		R1 1/2	
IDF55E	40°C, 0.7 MPa	8.4	9.8	55		R 2	
IDF75E		11.0	12.4	75			
IDF120D		20.0	23.0	120		2 1/2B flange	P.10 to 12
IDF150D		25.0	30.0	150		3B flange	
IDF190D		32.0	38.0	190			
IDF240D		43.0	50.0	240		4B flange	
IDF370B	35°C, 0.7 MPa	54.0	65.0	370	R22	6B flange	

Series IDU

High temperature air inlet type
Rated inlet air temperature: 50, 55°C

Model	Rated inlet condition	Air flow capacity m³/min (ANR) 50 Hz	Air flow capacity m³/min (ANR) 60 Hz	Applicable air compressor (kW)	Refrigerant	Port size	Page
IDU3E	55°C, 0.7 MPa	0.32	0.37	2.2	R134a (HFC)	Rc 3/8	P.13 to 16
IDU4E		0.52	0.57	3.7		Rc 1/2	
IDU6E		0.75	0.82	5.5		Rc 3/4	
IDU8E		1.1	1.2	7.5			
IDU11E		1.5	1.7	11			
IDU15E		2.6	2.8	15		Rc 1	
IDU22E		3.9	4.3	22	R407C (HFC)	R 1	
IDU37E		5.7	6.1	37		R1 1/2	
IDU55C	50°C, 0.7 MPa	7.65	9.0	55	R22	R 2	P.17 to 19
IDU75C		10.5	12.4	75			

∗ See separate catalog for dryer models conforming with foreign standards (CE and UL).

INDEX

2. Options

Note 1) The IDF370B is equipped as standard.

3. Optional Accessories

Model Selection

The corrected air flow capacity, which considers the user's operating conditions, is required for selecting the air dryer. Please select using the following procedures.

1 Selecting IDF or IDU

Select IDF or IDU from inlet air temperature used.
- **Inlet air temperature 5 to 50°C ····· IDF**
- **Inlet air temperature 50 to 80°C ····· IDU**

2 Reading correction factor

Obtain the correction factor A to D suitable for your operating condition from the graph at left.

IDF Selection Example

Condition		Data symbol	Correction factor Note)
Inlet air temperature	40°C	A	0.82
Ambient temperature	35°C	B	0.96
Outlet air pressure dew point	10°C	C	1
Inlet air pressure	0.5 MPa	D	0.88
Air flow rate	0.3 m^3/min	—	—
Power supply frequency	50 Hz	—	—

Note) Values obtained from Correction Factor Table on page 2.

IDU Selection Example

Condition		Data symbol	Correction factor Note)
Inlet air temperature	60°C	A	0.95
Ambient temperature	35°C	B	0.93
Outlet air pressure dew point	10°C	C	1
Inlet air pressure	0.5 MPa	D	0.88
Air flow rate	0.4 m^3/min	—	—
Power supply frequency	60 Hz	—	—

Note) Values obtained from Correction Factor Table on page 2.

3 Confirmation of coefficient

IDF: Correction factor = 0.82 x 0.96 x 1 x 0.88 = 0.69
Max. coefficient value is 1.5. Correction factor is 1.5 when the calculation result is 1.5 or greater.

IDU: Correction factor = 0.95 x 0.93 x 1 x 0.88 = 0.78
Max. coefficient value is 1.5. Correction factor is 1.5 when the calculation result is 1.5 or greater.

4 Calculating corrected air flow capacity

Obtain the corrected air flow capacity from the following formula.
Corrected air flow capacity = Operating air flow capacity ÷ (Correction factor A x B x C x D)

IDF: Corrected air flow capacity = 0.3 m^3/min ÷ (0.82 x 0.96 x 1 x 0.88) = 0.43 m^3/min

IDU: Corrected air flow capacity = 0.4 m^3/min ÷ (0.95 x 0.93 x 1 x 0.88) = 0.51 m^3/min

5 Selecting a model

Select a model which corrected air flow capacity exceeds the air flow capacity from the specification table. (For air flow capacity, refer to the data below E.)

IDF: According to the corrected air flow capacity of 0.43 m^3/min, the **IDF4E** will be selected which air flow capacity is 0.52 m^3/min at 50 Hz.

IDU: According to the corrected air flow capacity of 0.51 m^3/min, the **IDU4E** will be selected which air flow capacity is 0.57 m^3/min at 60 Hz.

6 Options

Refer to page 20 through to 24.

7 Model selected

Refer to page 3, 7 and 10.

Refer to page 13 and 17.

8 Selecting optional accessories

Refer to page 25 through to 32.

Correction Factors

Data A: Inlet Air Temperature

Series IDF

IDF1E to 37E

Inlet air temp. (°C)	Correction factor
5 to 30	1.3
35	1
40	0.82
45	0.68
50	0.57

IDF55E, 75E, 120D to 240D

Inlet air temp. (°C)	Correction factor
5 to 30	1.35
35	1.25
40	1
45	0.8
50	0.6

IDF370B

Inlet air temp. (°C)	Correction factor
5 to 30	1.25
35	1.00
40	0.83
45	0.70
50	0.60

Series IDU

IDU3E to IDU37E

Inlet air temp. (°C)	Correction factor
5 to 45	1.15
50	1.07
55	1
60	0.95
65	0.9
70	0.86
75	0.82
80	0.79

IDU55C, 75C

Inlet air temp. (°C)	Correction factor
5 to 35	1.30
40	1.25
45	1.15
50	1.00
55	0.95
60	0.95

Data B: Ambient Temperature

Series IDF

IDF1E to 75E

Ambient temp. (°C)	Correction factor
2 to 25	1.14
30	1.04
32	1
35	0.96
40	0.9

IDF120D to 240D

Ambient temp. (°C)	Correction factor
2 to 25	1.10
30	1.05
32	1.00
35	0.95
40	0.90

Series IDU

IDU3E to IDU37E

Ambient temp. (°C)	Correction factor
2 to 25	1.2
30	1.04
32	1
35	0.93
40	0.84

IDU55C, 75C

Ambient temp. (°C)	Correction factor
2 to 25	1.35
30	1.10
32	1.00
35	0.75
40	0.55

Data C: Outlet Air Pressure Dew Point

Series IDF, IDU

Outlet air pressure dew point (°C)	Correction factor
5	0.7
10	1
15	1.3

Data D: Inlet Air Pressure

Series IDF

IDF1E to 75E

Inlet air temp. (°C)	Correction factor
0.2	0.62
0.3	0.72
0.4	0.81
0.5	0.88
0.6	0.95
0.7	1
0.8	1.06
0.9	1.11
1 to 1.6	1.16

IDF120D to 370B

Inlet air temp. (°C)	Correction factor
0.2	0.68
0.3	0.77
0.4	0.84
0.5	0.90
0.6	0.95
0.7	1
0.8	1.03
0.9	1.06
1.0	1.08

Series IDU

IDU3E to 37E

Inlet air temp. (°C)	Correction factor
0.2	0.62
0.3	0.72
0.4	0.81
0.5	0.88
0.6	0.95
0.7	1
0.8	1.06
0.9	1.11
1 to 1.6	1.16

IDU55C, 75C

Inlet air temp. (°C)	Correction factor
0.2	0.68
0.3	0.77
0.4	0.84
0.5	0.90
0.6	0.95
0.7	1
0.8	1.03
0.9	1.06
1.0	1.08

Data E: Air Flow Capacity

Series IDF

Model		IDF1E	IDF2E	IDF3E	IDF4E	IDF6E	IDF8E	IDF11E	IDF15E	IDF22E	IDF37E	IDF55E	IDF75E
Inlet air pressure m^3/min (ANR)	50 Hz	0.10	0.20	0.32	0.52	0.75	1.22	1.65	2.8	3.9	5.7	8.4	11.0
	60 Hz	0.12	0.235	0.37	0.57	0.82	1.32	1.82	3.1	4.3	6.1	9.8	12.4

Model		IDF120D	IDF150D	IDF190D	IDF240D	IDF370B
Inlet air pressure m^3/min (ANR)	50 Hz	20.0	25.0	32.0	43.0	54.0
	60 Hz	23.0	30.0	38.0	50.0	65.0

Note) In the case of “Option A (Cool compressed air output)”, the air flow capacity is different. Refer to page 20 for details.

Series IDU

Model		IDU3E	IDU4E	IDU6E	IDU8E	IDU11E	IDU15E	IDU22E	IDU37E	IDU55C	IDU75C
Inlet air pressure m^3/min (ANR)	50 Hz	0.32	0.52	0.75	1.1	1.5	2.6	3.9	5.7	7.65	10.5
	60 Hz	0.37	0.57	0.82	1.2	1.7	2.8	4.3	6.1	9.0	12.4

Refrigerant R134a (HFC)
Standard Temperature Air Inlet
Series IDF□E
1E, 2E, 3E, 4E, 6E, 8E, 11E, 15E
(Inlet air temperature: 35°C, Outlet air pressure dew point: 10°C)

How to Order

IDF 8 E — 10 —

Nil
A
C
K
L
M
R
S
T

Size

Size	Compressor size Note)
1	0.75 kW
2	1.5 kW
3	2.2 kW
4	3.7 kW
6	5.5 kW
8	7.5 kW
11	11 kW
15	15 kW

Note) Please note that the above values are for reference only. Therefore, check the actual compressor capacity.

Voltage

Symbol	Voltage	Applicable size							
		1	2	3	4	6	8	11	15
10	Single-phase 100 VAC (50 Hz) 100/110 VAC (60 Hz)	●	●	●	●	●	●	●	●
20	Single-phase 200 VAC (50 Hz) 200/220 VAC (60 Hz)	—	—	●	●	●	●	●	●

Option

Symbol Note 1) / Option / Size	Nil	A	C	K	L Note 3)	M	R	S	T
	None	Cool compressed air output	Anti-corrosive treatment	For medium air pressure (Auto drain bowl type: Metal bowl with level gauge)	With heavy duty auto drain	With motor type auto drain	With circuit breaker	Terminal block connection (Voltage symbol 10 only) Note 2)	With terminal block for run & alarm signal
1	●	●	●	—	—	—	—	●	—
2	●	●	●	—	—	—	—	●	—
3	●	●	●	—	—	—	—	●	—
4	●	●	●	—	●	●	●	●	●
6	●	●	●	●	●	●	●	●	●
8	●	●	●	●	●	●	●	●	●
11	●	●	●	●	●	●	●	●	●
15	●	●	●	●	●	●	●	●	●

Note 1) Enter alphabetically when multiple options are combined.
However, the following combinations are not possible.
- R and S (Because S function is also included in R.)
- S and T (Because S function is also included in T.)
- Combination of K, L and M are not possible because an auto drain can only be attached to a single option.

Note 2) Voltage symbol 20 (200 VAC) is the terminal block connection as standard. The option S cannot be chosen.
Voltage symbol 10 (100 VAC) is the power cable with plug as standard.

Note 3) The dryer is suitable for medium air pressure.

Note 4) Refer to page 20 to 23 for further information on options.

JIS Symbol

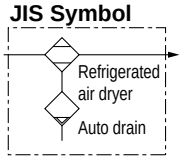

Standard Specifications

Specifications \ Model				Standard temperature air inlet							
				IDF1E	IDF2E	IDF3E	IDF4E	IDF6E	IDF8E	IDF11E	IDF15E
Rated conditions Note 3)	Air flow capacity m³/min	Standard condition (ANR) Note 1)	50 Hz	0.10	0.20	0.32	0.52	0.75	1.22	1.65	2.8
			60 Hz	0.12	0.235	0.37	0.57	0.82	1.32	1.82	3.1
		Compressor intake condition Note 2)	50 Hz	0.10	0.21	0.33	0.54	0.78	1.27	1.72	2.9
			60 Hz	0.12	0.24	0.38	0.59	0.85	1.37	1.9	3.2
	Inlet air pressure (MPa)			0.7							
	Inlet air temperature (°C)			35							
	Ambient temperature (°C)			32							
	Outlet air pressure dew point (°C)			10							
Operating ranges	Fluid			Compressed air							
	Inlet air temperature (°C)			5 to 50							
	Inlet air pressure (MPa)			0.15 to 1.0							
	Ambient temp. (humidity) (°C)			2 to 40 (Relative humidity of 85% or less)							
Electric specifications	Power supply voltage (frequency) Note 4)			Single-phase: 100 VAC (50 Hz), 100/110 VAC (60 Hz) Note 4) Single-phase: 200 VAC (50 Hz), 200/220 VAC (60 Hz)							
	Power consumption (W) 50/60 Hz	Single-phase 100 V		180/202	180/202	180/202	180/202	180/202	208/236	385/440	540/620
		Single-phase 200 V		—	—						
	Operating current (A) 50/60 Hz	Single-phase 100 V		2.4/2.5	2.4/2.5	2.4/2.5	2.4/2.5	2.4/2.5	3.0/3.1	5.7/5.7	6.1/6.3
		Single-phase 200 V		—	—	1.2/1.3	1.2/1.3	1.2/1.3	1.5/1.5	3.4/3.0	3.8/4.0
Applicable circuit breaker capacity Note 5) (A)				10 (100 VAC), 5 (200 VAC)							10 (100 VAC) 10 (200 VAC)
Condenser				Air-cooled type							
Refrigerant				R134a (HFC)							
Auto drain Note 6)				Float type (Normally closed)	Float type (Normally open)						
Port size				Rc 3/8			Rc 1/2	Rc 3/4			Rc 1
Weight (kg)				16	17	18	22	23	27	28	46
Coating color				Body panel: White 1 Base: Gray 2							
Applicable air compressor output (Reference) In case of screw type (kW)				0.75	1.5	2.2	3.7	5.5	7.5	11	15

Note 1) Air flow capacity under the standard condition (ANR) [atmospheric pressure at 20°C, relative humidity at 65%]
Note 2) Air flow capacity converted by the compressor intake condition [atmospheric pressure at 32°C]
Note 3) Select air dryer according to the model selection method (page 1, 2) for the models beyond the rated specifications.
Note 4) When selecting a power supply voltage, refer to "How to Order" on page 3.
Note 5) Install a circuit breaker with a sensitivity of 30 mA.

Replacement Parts

Model	IDF1E	IDF2E	IDF3E	IDF4E	IDF6E	IDF8E	IDF11E	IDF15E
Auto drain replacement parts no. Note 6)	AD37	AD38			AD48			

Note 6) The part number for the auto drain components without including the body part.
Body part replacement is impossible.

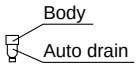

Construction (Air/Refrigerant Circuit)

Humid, hot air coming into the air dryer will be cooled down by a cooler (heat exchanger). Water condensed at this time will be removed from the air by a drain separator (auto drain) and drained out automatically. Air separated from the water will be heated by a re-heater (heat exchanger) to obtain the dried air, which goes through to the outlet side.

IDF1E

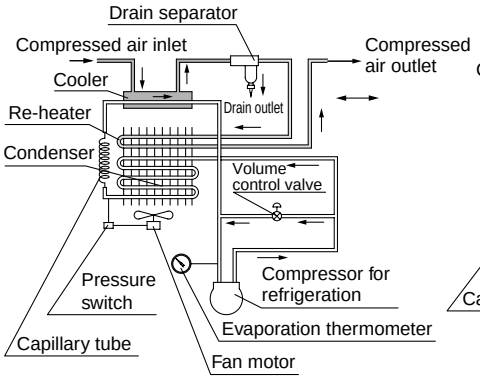

IDF2E, IDF3E

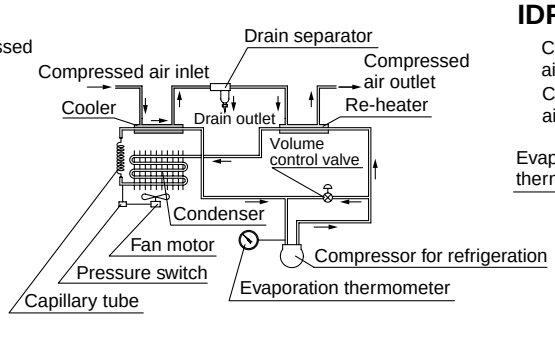

IDF4E, IDF6E IDF8E, IDF11E, IDF15E

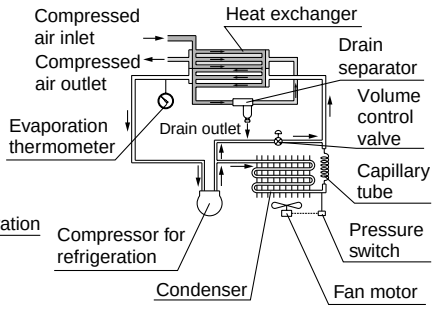

Dimensions

IDF1E to IDF3E

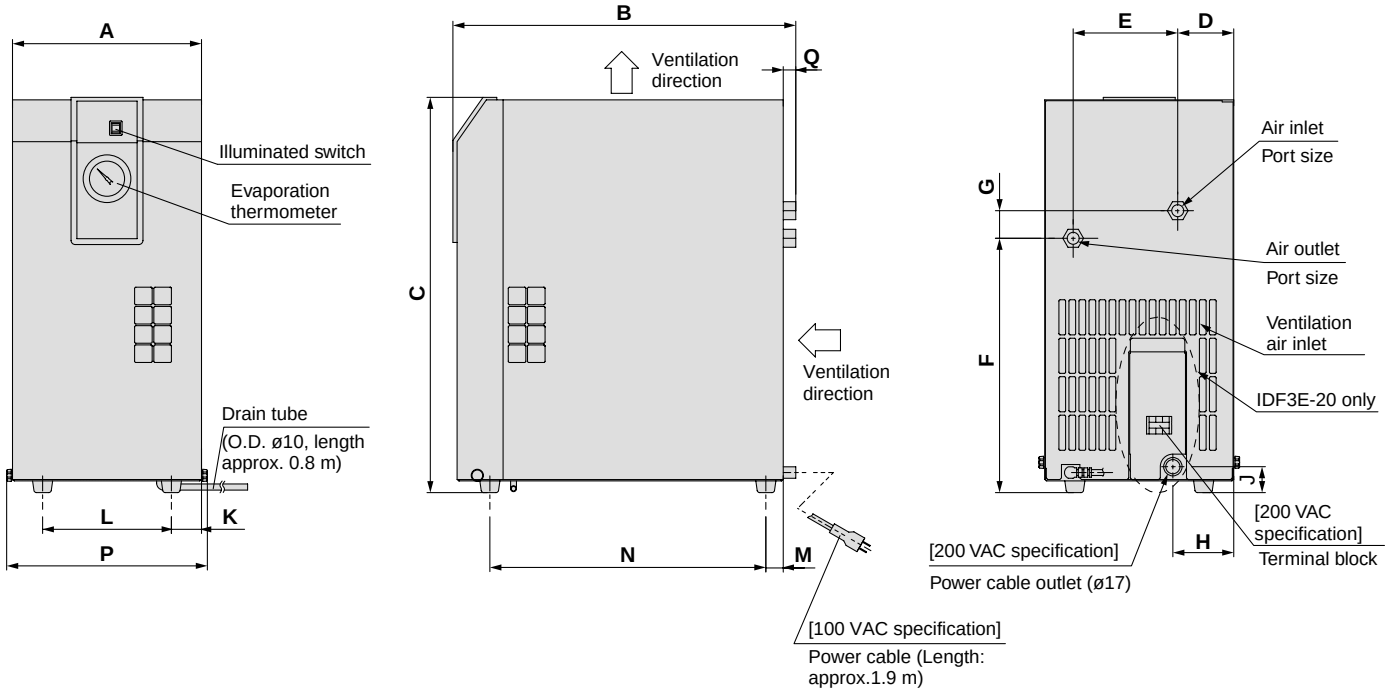

IDF4E to IDF11E

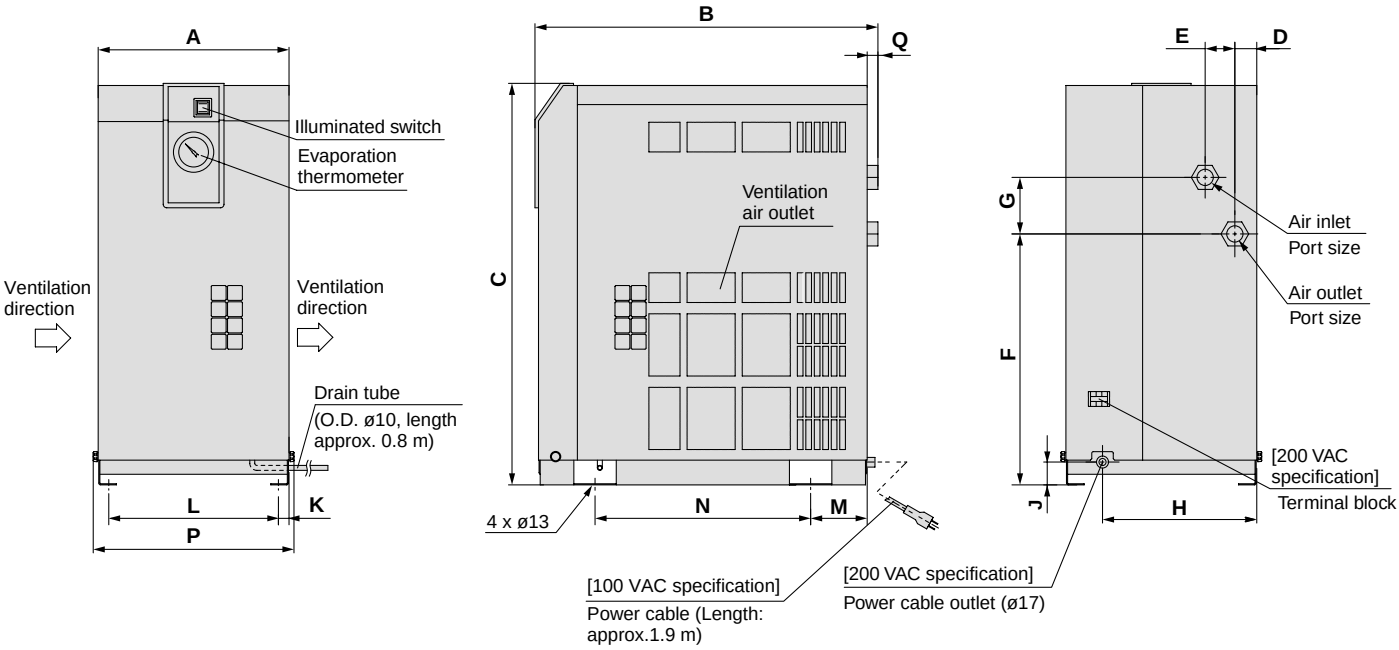

Dimensions (mm)

Model	Port size	A	B	C	D	E	F	G	H	J	K	L	M	N	P	Q
IDF1E	Rc 3/8	226	410	413	69	101	270	32	—	—	38	150	21	330	240	15
IDF2E					51	125	232	138					24	327		
IDF3E				473	67		304	33	73	31	36	154	21	330		
IDF4E	Rc 1/2	270	453	498	31	42	283	80	230	32	15	240	80	275	284	13
IDF6E	Rc 3/4		455													15
IDF8E			485	568			355							300		
IDF11E																

Dimensions

IDF15E

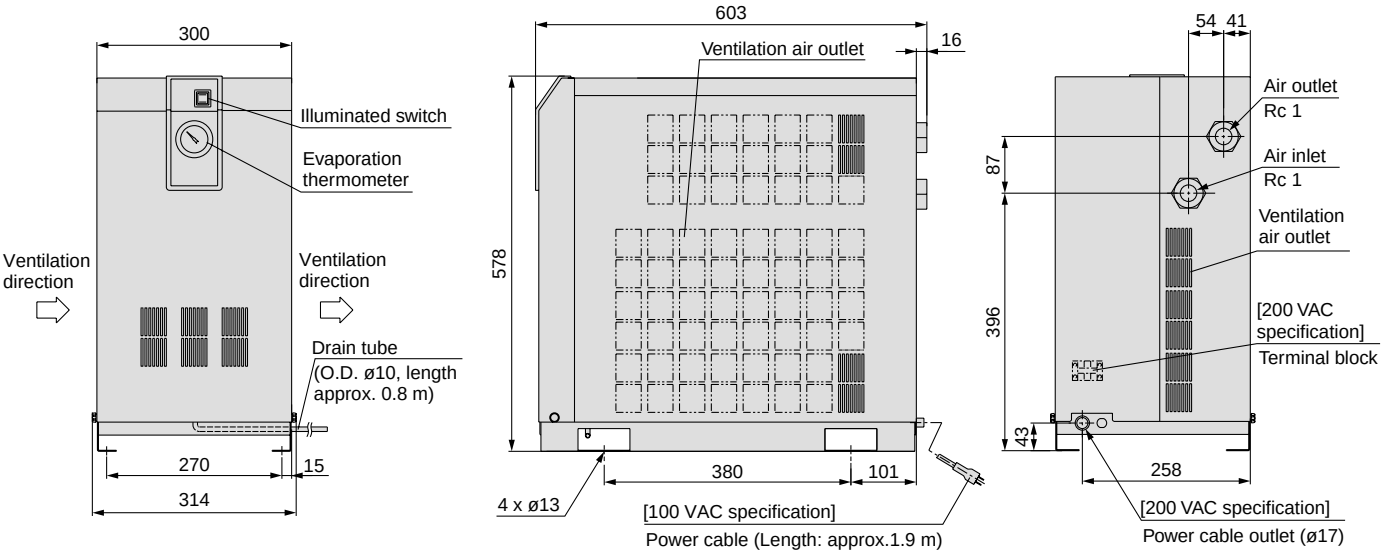

Refrigerant R407C (HFC)
Standard Temperature Air Inlet
Series IDF□E
22E, 37E, 55E, 75E
(Inlet air temp.: 35°C (22E, 37E), 40°C (55E, 75E), Outlet air pressure dew point: 10°C)

How to Order

IDF 55 E — 30 —

Nil
A
C
K
L
M
R
T

Size

Size	Compressor size Note)
22	22 kW
37	37 kW
55	55 kW
75	75 kW

Note) Please note that the above values are for reference only. Therefore, check the actual compressor capacity.

Voltage

Symbol	Voltage	Applicable size			
		22	37	55	75
20	Single-phase 200 VAC (50 Hz) 200/220 VAC (60 Hz)	●	●	—	—
30	Three-phase 200 VAC (50 Hz) 200/220 VAC (60 Hz)	●	●	●	●

Option

Symbol Note 1) / Option / Size	Nil	A	C	K	L Note 3)	M	R	T
	None	Cool compressed air output	Anti-corrosive treatment	For medium air pressure Auto drain bowl type: Metal bowl with level gauge	With heavy duty auto drain	With motor type auto drain	With circuit breaker	With terminal block for run & alarm signal
22	●	●	●	●	●	●	●	●
37	●	●	●	●	●	●	●	●
55	●	●	●	— Note 2)	●	●	●	●
75	●	●	●	— Note 2)	●	●	●	●

Note 1) Enter alphabetically when multiple options are combined.
However, the following combinations are not possible.
• Combination of K, L and M are not possible because an auto drain can only be attached to a single option.
Note 2) Select the option "L" for 55E and 75E which need medium air pressure.
Note 3) The dryer is suitable for medium air pressure.
Note 4) Refer to page 20 to 23 for further information on options.

JIS Symbol

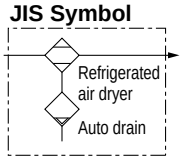

Standard Specifications

Specifications \ Model				Standard temperature air inlet			
				IDF22E	IDF37E	IDF55E	IDF75E
Rated conditions Note 3)	Air flow capacity m³/min	Standard condition (ANR) Note 1)	50 Hz	3.9	5.7	8.4	11.0
			60 Hz	4.3	6.1	9.8	12.4
		Compressor intake condition Note 2)	50 Hz	4.1	5.9	8.7	11.5
			60 Hz	4.5	6.4	10.2	12.9
	Inlet air pressure (MPa)			0.7			
	Inlet air temperature (°C)			35		40	
	Ambient temperature (°C)			32			
	Outlet air pressure dew point (°C)			10			
Operating ranges	Fluid			Compressed air			
	Inlet air temperature (°C)			5 to 50			
	Inlet air pressure (MPa)			0.15 to 1.0			
	Ambient temp. (humidity) (°C)			2 to 40 (Relative humidity of 85% or less)			
Electric specifications	Power supply voltage (frequency) Note 4)			Single-phase/Three-phase: 200 VAC (50 Hz) Note 4) Single-phase/Three-phase: 200/220 VAC (60 Hz)		Three-phase: 200 VAC (50 Hz) Three-phase: 200/220 VAC (60 Hz)	
	Power consumption (W) 50/60 Hz	Single-phase 200 V		810/940	810/940	—	—
		Three-phase 200 V		850/1070	850/1070	1300/1700	2000/2500
	Operating current (A) 50/60 Hz	Single-phase 200 V		4.3/4.7	4.3/4.7	—	—
		Three-phase 200 V		3.3/3.5	3.3/3.5	5.0/5.4	7.2/8.0
Applicable circuit breaker capacity Note 5) (A)				10 (200 VAC)			15 (200 VAC)
Condenser				Air-cooled type			
Refrigerant				R407C (HFC)			
Auto drain Note 6)				Float type (Normally open)			
Port size				R1	R1 1/2	R2	
Weight (kg)				54	62	100	116
Coating color				Body panel: White 1 Base: Gray 2			
Applicable air compressor output (Reference) In case of screw type (kW)				22	37	55	75

Note 1) Air flow capacity under the standard condition (ANR) [atmospheric pressure at 20°C, relative humidity at 65%]
Note 2) Air flow capacity converted by the compressor intake condition [atmospheric pressure at 32°C]
Note 3) Select air dryer according to the model selection method (page 1, 2) for the models beyond the rated specifications.
Note 4) When selecting a power supply voltage, refer to "How to Order" on page 7.
Note 5) Install a circuit breaker with a sensitivity of 30 mA.

Replacement Parts

Model	ID22E	IDF37E	IDF55E	IDF75E
Auto drain replacement parts no. Note 6)	AD48			

Note 6) The part number for the auto drain components without including the body part. Body part replacement is impossible.

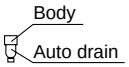

Construction (Air/Refrigerant Circuit)

Humid, hot air coming into the air dryer will be cooled down by a cooler re-heater (heat exchanger). Water condensed at this time will be removed from the air by an auto drain and drained out automatically. Air separated from the water will be heated by a cooler re-heater (heat exchanger) to obtain the dried air, which goes through to the outlet side.

IDF22E, IDF37E, IDF55E, IDF75E

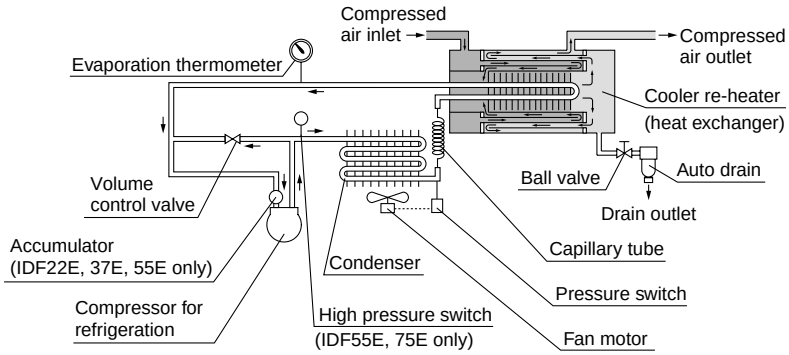

Dimensions

IDF22E, IDF37E

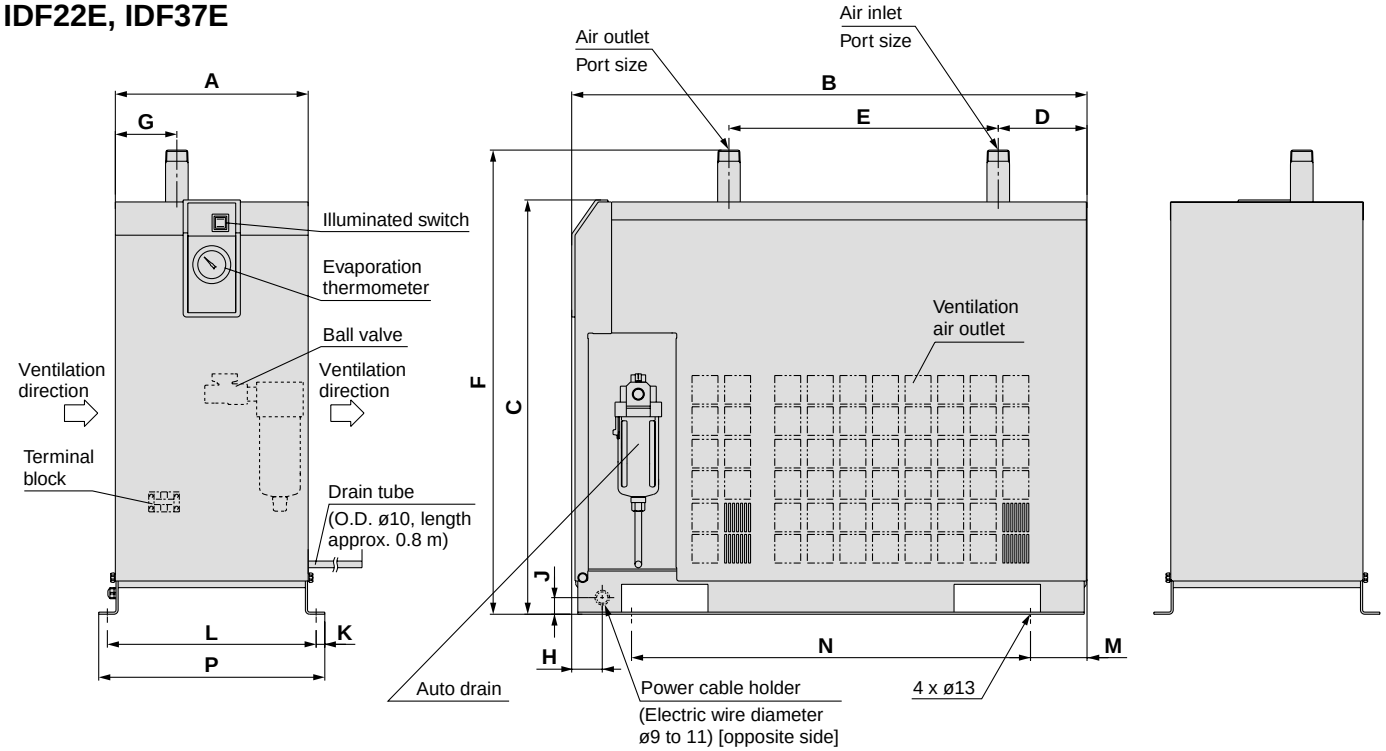

IDF55E, IDF75E

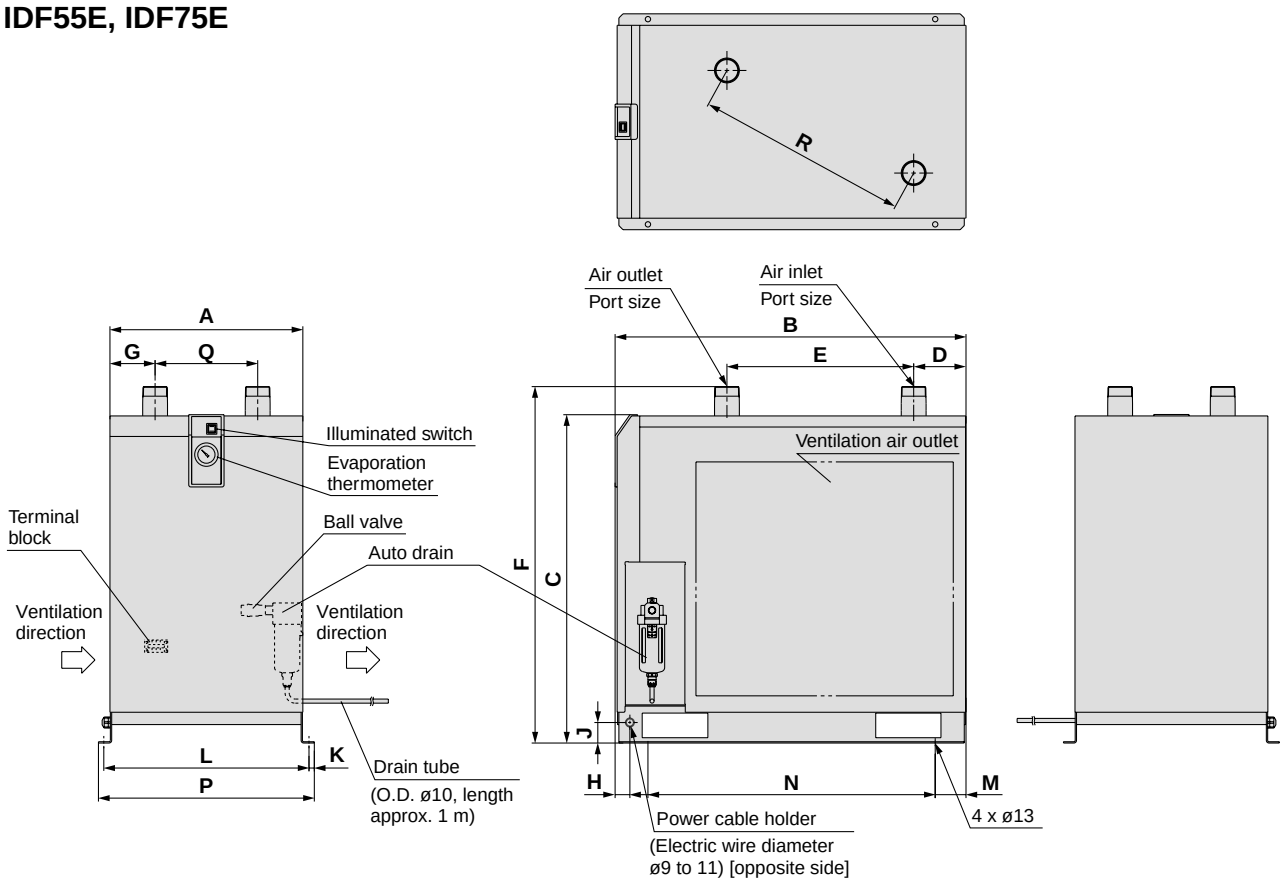

Dimensions (mm)

Model	Port size	A	B	C	D	E	F	G	H	J	K	L	M	N	P	Q	R
IDF22E	R1	290	775	623	134	405	698	93	46	25	13	314	85	600	340	—	—
IDF37E	R1 1/2		855											680			
IDF55E	R2	470	855	800	128	455	868	110	36	50	13	500	75	700	526	250	519
IDF75E				900			968										

Refrigerant R407C (HFC) / R22
Standard Temperature Air Inlet
Series IDF□D, B
120D, 150D, 190D, 240D, 370B

(Inlet air temp.: 40°C (120D, 150D, 190D, 240D), 35°C (370B), Outlet air pressure dew point: 10°C)

How to Order

Refrigerant R407C
IDF120D to IDF240D

IDF 120 D — 3 / 9 — 220V / 240V / 380V / 400V / 415V / 440V — Nil / C / M / R / W

Size

Size	Compressor size
120	120 kW
150	150 kW
190	190 kW
240	240 kW

Voltage

Symbol	Voltage
3	Three-phase 200 VAC (50 Hz) 200/220 VAC (60 Hz)
9	Three-phase different voltage (Built-in transducer)

Option

Symbol	Option
Nil	None
C	Anti-corrosive treatment
M	With motor type auto drain
R	With circuit breaker
W	Water-cooled condenser

Refrigerant R22
IDF370B

IDF 370 B — 60 — 3 / 9 — 220V / 240V / 380V / 400V / 415V / 440V — Nil / X202 / X204 / X205

Size

Size	Compressor size
370	370 kW

Port size

Symbol	Port size
60	6B flange

Voltage

Symbol	Voltage
3	Three-phase 200 VAC (50/60 Hz)
9 Note)	Three-phase different voltage

Note) Transducer integrated into the base

Option

Symbol	Option
Nil	None
X202	With circuit breaker
X204	Anti-corrosive treatment
X205	With heavy duty auto drain

Standard Specifications

Specifications \ Model				Standard temperature air inlet				
				IDF120D	IDF150D	IDF190D	IDF240D	IDF370B
Rated conditions Note 3)	Air flow capacity m³/min	Standard condition (ANR) Note 1)	50 Hz	20	25	32	43	54
			60 Hz	23	30	38	50	65
		Compressor intake condition Note 2)	50 Hz	21	26	33	45	56
			60 Hz	24	31	40	52	68
	Inlet air pressure (MPa)			0.7				
	Inlet air temperature (°C)			40				35
	Ambient temperature (°C)			32				—
	Outlet air pressure dew point (°C)			10				
Operating ranges	Fluid			Compressed air				
	Inlet air temperature (°C)			5 to 50				
	Inlet air pressure (MPa)			0.15 to 0.97				
	Ambient temp. (humidity) (°C)			2 to 43 (Relative humidity of 85% or less)				
Electric specifications	Power supply voltage (frequency) Note 4)			Three-phase: 200 VAC (50 Hz), 200/220 VAC (60 Hz)				Three-phase: 200 VAC (50/60 Hz)
	Power consumption (W) 50/60 Hz	Three-phase 200 V		2.5	4.0	4.9	6.3	8.1
				3.1	5.0	5.9	7.6	9.5
	Operating current (A) 50/60 Hz	Three-phase 200 V		9.8	15.3	19.5	26.1	28.0
				10.1	16.1	20.1	26.4	31.0
Applicable circuit breaker capacity Note 5) (A)				30	45	50	60	80
Condenser				Air-cooled type				Water-cooled type
Refrigerant				R407C (HFC)				R22
Auto drain				ADH4000-04				ADM200-042-8
Port size Note 6)				2 1/2B flange	3B flange		4B flange	6B flange
Weight (kg)				330	350	450	660	1100
Coating color				Body panel: White 1 Base: Black				Operating panel part: Sky blue Other panel (except base): White
Applicable air compressor output (Reference) In case of screw type (kW)				120	150	190	240	370

Note 1) Air flow capacity under the standard condition (ANR) [atmospheric pressure at 20°C, relative humidity at 65%]
Note 2) Air flow capacity converted by the compressor intake condition [atmospheric pressure at 32°C]
Note 3) Select air dryer according to the model selection method (page 1, 2) for the models beyond the rated specifications.
Note 4) When selecting a power supply voltage, refer to "How to Order" on page 10.
Note 5) Install a circuit breaker with a sensitivity of 30 mA.

Water-Cooled Condenser Specifications (IDF370B)

Condenser	Shell and tube type
Cooling water flow Note 1)	100 ℓ/min
Cooling tower performance Note 2)	10 RT
Water flow regulator	Pressure style automatic water supply valve
Fluid port size	1 1/4B union

Note 1) Value when cooling water inlet temperature is 32°C and with rated load
Note 2) Calculated at 1 RT = 3300 kcal/h

Motor Type Auto Drain

Model	Operating cycle	
IDF370B	4 cycles per minute	8 sec/min

Power supply	200 VAC 50/60 Hz
Power consumption	4 W

JIS Symbol

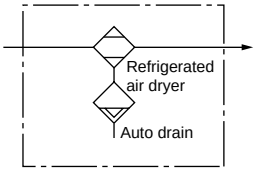

Construction (Air/Refrigerant Circuit)

IDF120D to IDF240D

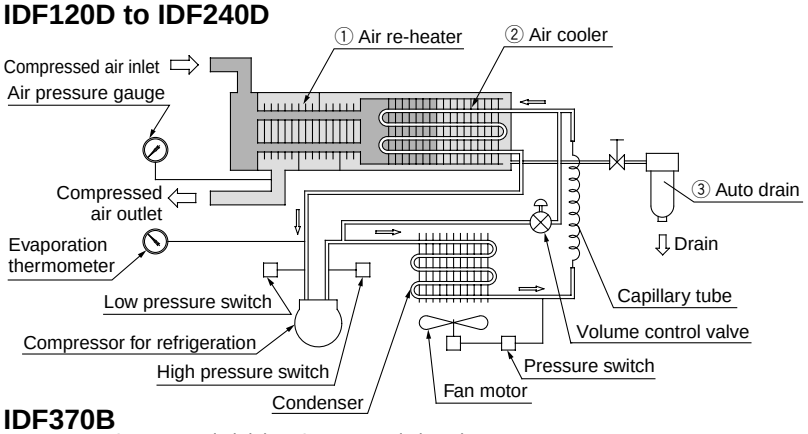

High temperature humid air from the air compessor passes through the air reheater ① and is pre-cooled by dehumified cool air. Then it is cooled to the specified temperature by the air cooler ② using the evaporation heat of CFC gas.
At this time, the oil mist and water generated by condensation are automatically exhausted by the auto drain ③. The cooled and dehumidified air goes back to the air reheater ① and heat is exchanged with hot air that flows into the air reheater. It is supplied as dry warm air without "sweating" in the piping system.

IDF370B

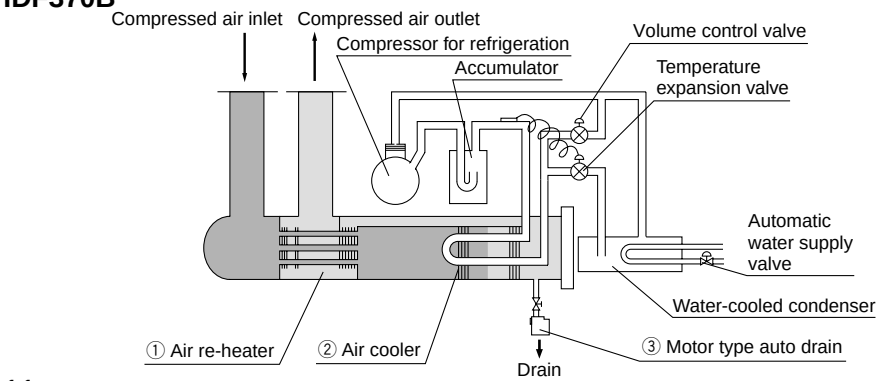

Dimensions

IDF120D, IDF150D, IDF190D, IDF240D

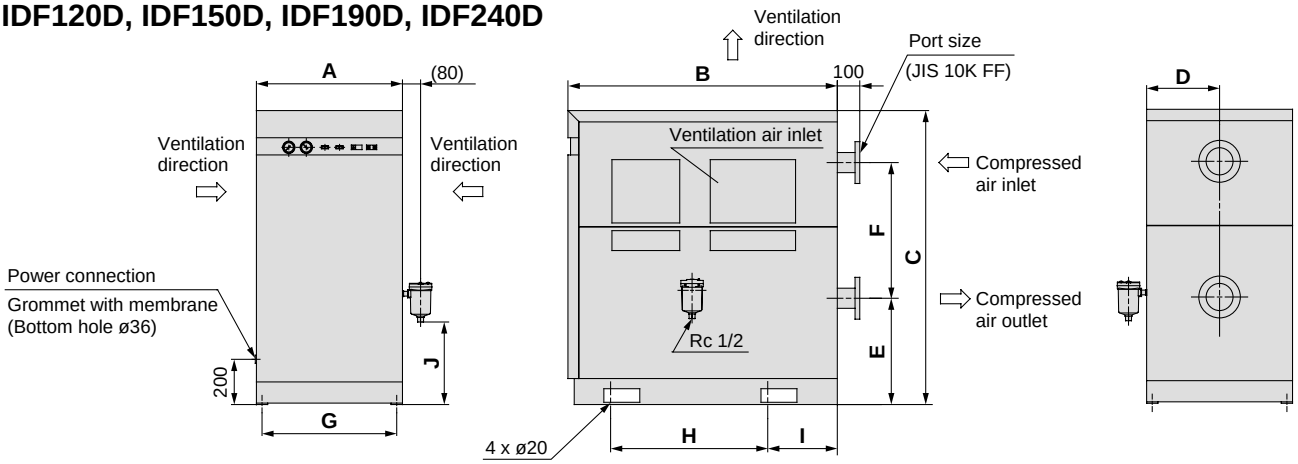

(mm)

Model	Inlet and outlet port	A	B	C	D	E	F	G	H	I	J
IDF120D	JIS 10K FF 2B 1/2 flange	650	1200	1300	325	470	600	600	660	330	365
IDF150D	JIS 10K FF 3B flange										
IDF190D	JIS 10K FF 3B flange	750	1510	1320	375	480	600	700	800	355	427
IDF240D	JIS 10K FF 4B flange	770	1550	1640	385	703	730	700	800	355	592

∗ Auto drain is enclosed in the same shipping package as the main body. The customer is required to mount the auto drain to the air dryer.

IDF370B

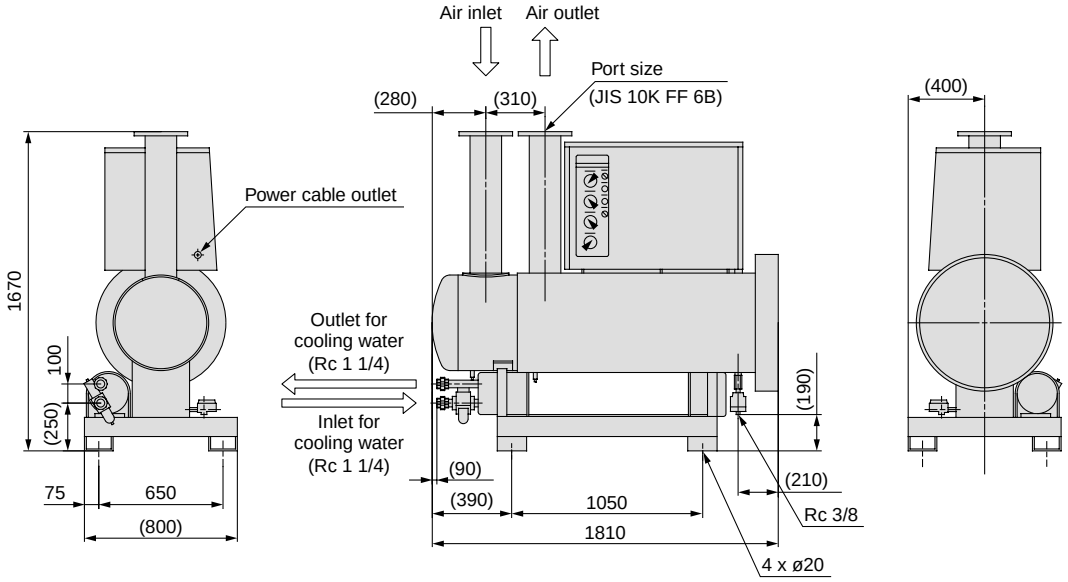

Power Transducer Integrated Type

IDF370B

This dryer has an integrated power transducer. It is used for applications in which a refregerated air dryer is operated with power voltage other than the standard specification. Models IDF120D to 240D have the transducer built in, so the outside dimensions are the same as the standard product.

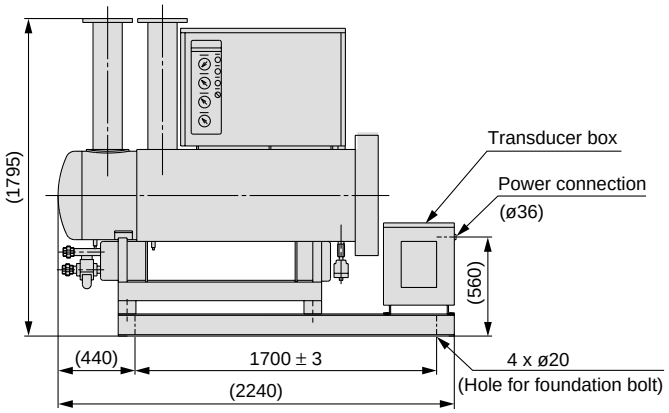

Refrigerant R134a (HFC)
High Temperature Air Inlet
Series IDU□E
3E, 4E, 6E, 8E, 11E, 15E, 22E, 37E
(Inlet air temperature: 55°C, Outlet air pressure dew point: 10°C)

How to Order

IDU 4 E — 10 —

Size

Size	Compressor size Note)
3	2.2 kW
4	3.7 kW
6	5.5 kW
8	7.5 kW
11	11 kW
15	15 kW
22	22 kW
37	37 kW

Note) Please note that the above values are for reference only. Therefore, check the actual compressor capacity.

Voltage

Symbol	Voltage	Applicable size							
		3	4	6	8	11	15	22	37
10	Single-phase 100 VAC (50 Hz) 100/110 VAC (60 Hz)	●	●	●	●	●	●	—	—
20	Single-phase 200 VAC (50 Hz) 200/220 VAC (60 Hz)	●	●	●	●	●	●	—	—
23	Single-phase 230 VAC (50 Hz)	●	●	●	●	●	—	—	—
30	Three-phase 200 VAC (50 Hz) 200/220 VAC (60 Hz)	—	—	—	—	—	—	●	●

Nil	
C	
K	
L	
M	
R	
S	
T	

Option

Symbol Note 1) / Option / Size	**Nil**	**C**	**K**	**L** Note 3)	**M**	**R**	**S**	**T**	**V** Note 3)
	None	Anti-corrosive treatment	For medium air pressure (Auto drain bowl type: Metal bowl with level gauge)	With heavy duty auto drain	With motor type auto drain (Voltage symbol 10, 20 only)	With circuit breaker	Terminal block connection (Voltage symbol 10 only) Note 2)	With terminal block for run & alarm signal	Timer type with solenoid valve (Voltage symbol 23 only)
3	●	●	●	●	●	●	●	●	●
4	●	●	●	●	●	●	●	●	●
6	●	●	●	●	●	●	●	●	●
8	●	●	●	●	●	●	●	●	●
11	●	●	●	●	●	●	●	●	●
15	●	●	●	— Note 5)	●	●	●	●	—
22	●	●	—	●	●	●	—	●	—
37	●	●	—	●	●	●	—	●	—

Note 1) Enter alphabetically when multiple options are combined.
However, the following combinations are not possible.
- R and S (Because S function is also included in R.)
- S and T (Because S function is also included in T.)
- Combination of K, L and M are not possible because an auto drain can only be attached to a single option.

Note 2) Voltage symbol 20 (200 VAC) is the terminal block connection as standard. The option S cannot be chosen.
Voltage symbol 10 (100 VAC) is the power cable with plug as standard.

Note 3) The dryer is suitable for medium air pressure.

Note 4) Refer to page 20 to 23 for further information on options.

Note 5) The mounting frame (special order) for IDU15E is attached to the option L. For further details, please consult with SMC.

Standard Specifications

Specifications \ Model				High temperature air inlet							
				IDU3E	IDU4E	IDU6E	IDU8E	IDU11E	IDU15E	IDU22E	IDU37E
Rated conditions Note 3)	Air flow capacity m³/min	Standard condition (ANR) Note 1)	50 Hz	0.32	0.52	0.75	1.1	1.5	2.6	3.9	5.7
			60 Hz	0.37	0.57	0.82	1.2	1.7	2.8	4.3	6.1
		Compressor intake condition Note 2)	50 Hz	0.33	0.54	0.78	1.14	1.6	2.7	4.1	5.9
			60 Hz	0.38	0.59	0.85	1.25	1.8	2.9	4.5	6.4
	Inlet air pressure (MPa)			0.7							
	Inlet air temperature (°C)			55							
	Ambient temperature (°C)			32							
	Outlet air pressure dew point (°C)			10							
Operating ranges	Fluid			Compressed air							
	Inlet air temperature (°C)			5 to 80							
	Inlet air pressure (MPa)			0.15 to 1.0							
	Ambient temp. (humidity) (°C)			2 to 40 (Relative humidity of 85% or less)							
Electric specifications	Power supply voltage (frequency) Note 4)			Single-phase: 100 VAC (50 Hz), 100/110 VAC (60 Hz) Note 4) Single-phase: 200 VAC (50 Hz), 200/220 VAC (60 Hz) Single-phase: 230 VAC ± 10% (50 Hz)						Three-phase: 200 VAC (50 Hz) Three-phase: 200/220 VAC (60 Hz)	
	Power consumption (W) 50/60 Hz	Single-phase 100 V		180/202	208/236	385/440	250/290 Note 5)	425/470 Note 5)	585/685 Note 5)	—	
		Single-phase 200 V								1100/1450	
		Single-phase 230 V (50 Hz)		210	220	400	260	425	—	—	—
	Operating current (A) 50/60 Hz	100 V		2.4/2.5	3.0/3.1	5.7/5.7	3.4/3.5	5.7/6.0	6.2/6.3	—	
		200 V		1.2/1.3	1.5/1.5	3.4/3.0	1.7/1.7	3.5/3.2	4.1/4.0	4.2/4.8	
		230 V (50 Hz)		1.5	1.6	2.9	1.7	3.0	—	—	—
Applicable circuit breaker capacity Note 6) (A)				10 (100 VAC), 5 (200 VAC, 230 VAC)					10 (100 VAC) 10 (200 VAC)	10 (200 VAC)	
Refrigerant				R134a (HFC)						R407C (HFC)	
Auto drain				Float type (Normally open)							
Port size				Rc 3/8	Rc 1/2	Rc 3/4			Rc 1	R1	R1 1/2
Weight (kg)				23	27	28	44	47	71	90	130
Coating color				Body panel: White 1 Base: Gray 2							
Applicable air compressor output (Reference) In case of screw type (kW)				2.2	3.7	5.5	7.5	11	15	22	37

Note 1) Air flow capacity under the standard condition (ANR) [atmospheric pressure at 20°C, relative humidity at 65%]
Note 2) Air flow capacity converted by the compressor intake condition [atmospheric pressure at 32°C]
Note 3) Select air dryer according to the model selection method (page 1, 2) for the models beyond the rated specifications.
Note 4) When selecting a power supply voltage, refer to "How to Order" on page 13.
Note 5) For the models IDU8E or larger, the energy saving function is performed by the addition of an after-cooler.
Note 6) Install a circuit breaker with a sensitivity of 30 mA.

JIS Symbol

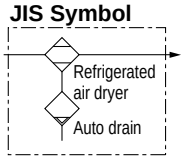

Replacement Parts

Model	IDU3E	IDU4E	IDU6E	IDU8E	IDU11E	IDU15E	IDU22E	IDU37E
Auto drain replacement parts no. Note 7)	AD48					AMG-CA450-D	AD48	

Note 7) The part number for the auto drain components without including the body part.
Body part replacement is impossible.

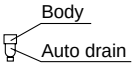

Construction (Air/Refrigerant Circuit)

Humid, hot air coming into the air dryer will be cooled down by a heat exchanger. Water condensed at this time will be removed from the air by a drain separator and drained out automatically. Air separated from the water will be heated by a heat exchanger to obtain the dried air, which goes through to the outlet side.
For models IDU8E to 15E, the humid and hot air introduced to the air dryer will be cooled down by the after-cooler before being cooled down by the heat exchanger.

IDU3E, IDU4E, IDU6E

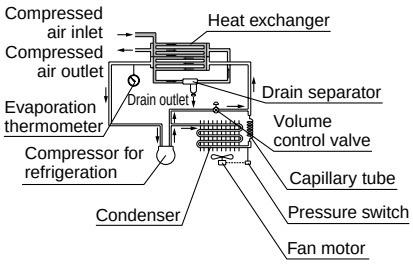

IDU8E, IDU11E, IDU15E

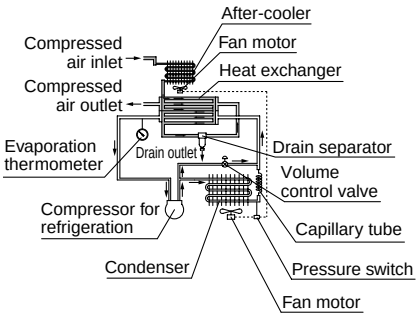

IDU22E, IDU37E

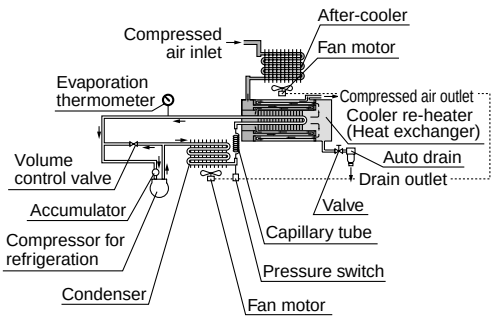

Dimensions

IDU3E to IDU6E

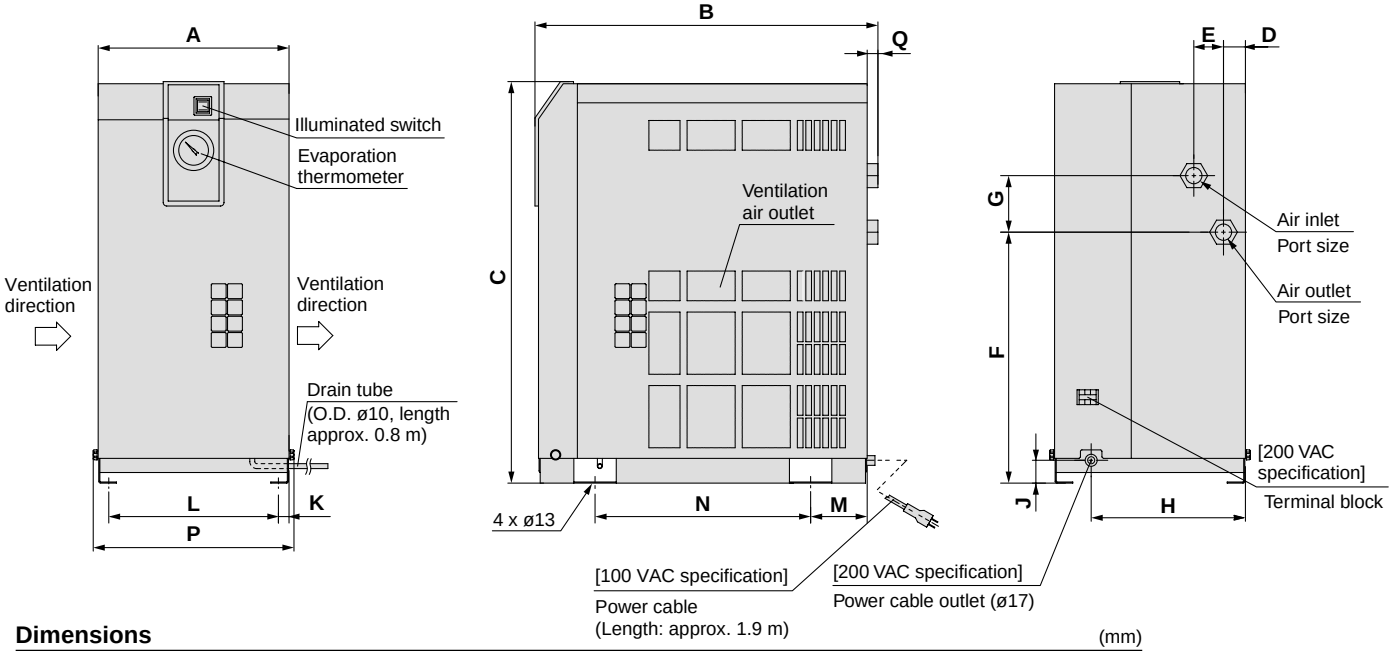

Dimensions (mm)

Model	Port size	A	B	C	D	E	F	G	H	J	K	L	M	N	P	Q
IDU3E	Rc 3/8	270	455	498	31	42	283	80	230	32	15	240	80	275	284	15
IDU4E	Rc 1/2		483	568			355							300		13
IDU6E	Rc 3/4		485													15

IDU8E to IDU15E

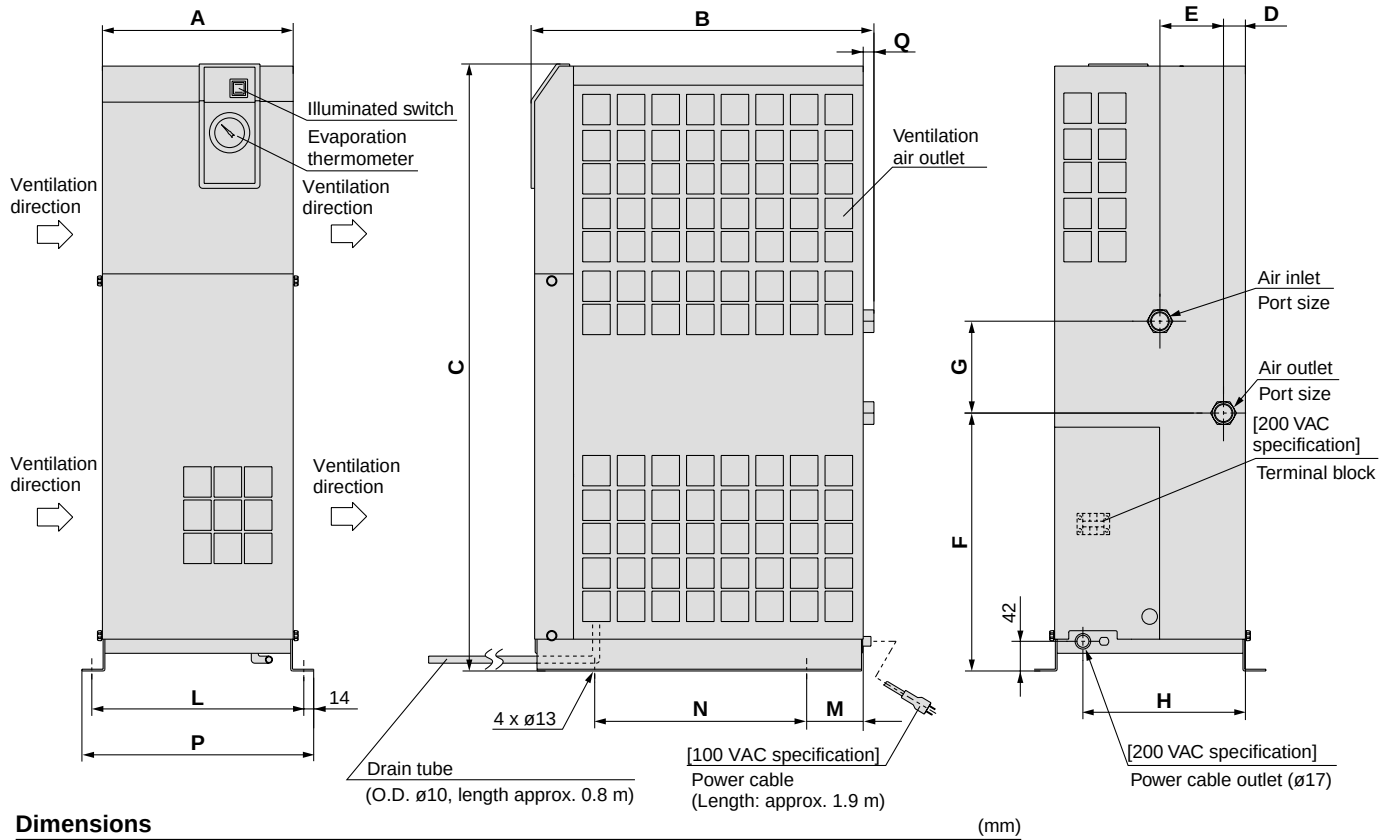

Dimensions (mm)

Model	Port size	A	B	C	D	E	F	G	H	L	M	N	P	Q
IDU8E	Rc 3/4	270	485	859	31	90	365	130	230	300	80	300	328	15
IDU11E				909										
IDU15E	Rc 1	300	620	960	79	54	425	93	258	330	66	470	358	16

Dimensions

IDU22E, IDU37E

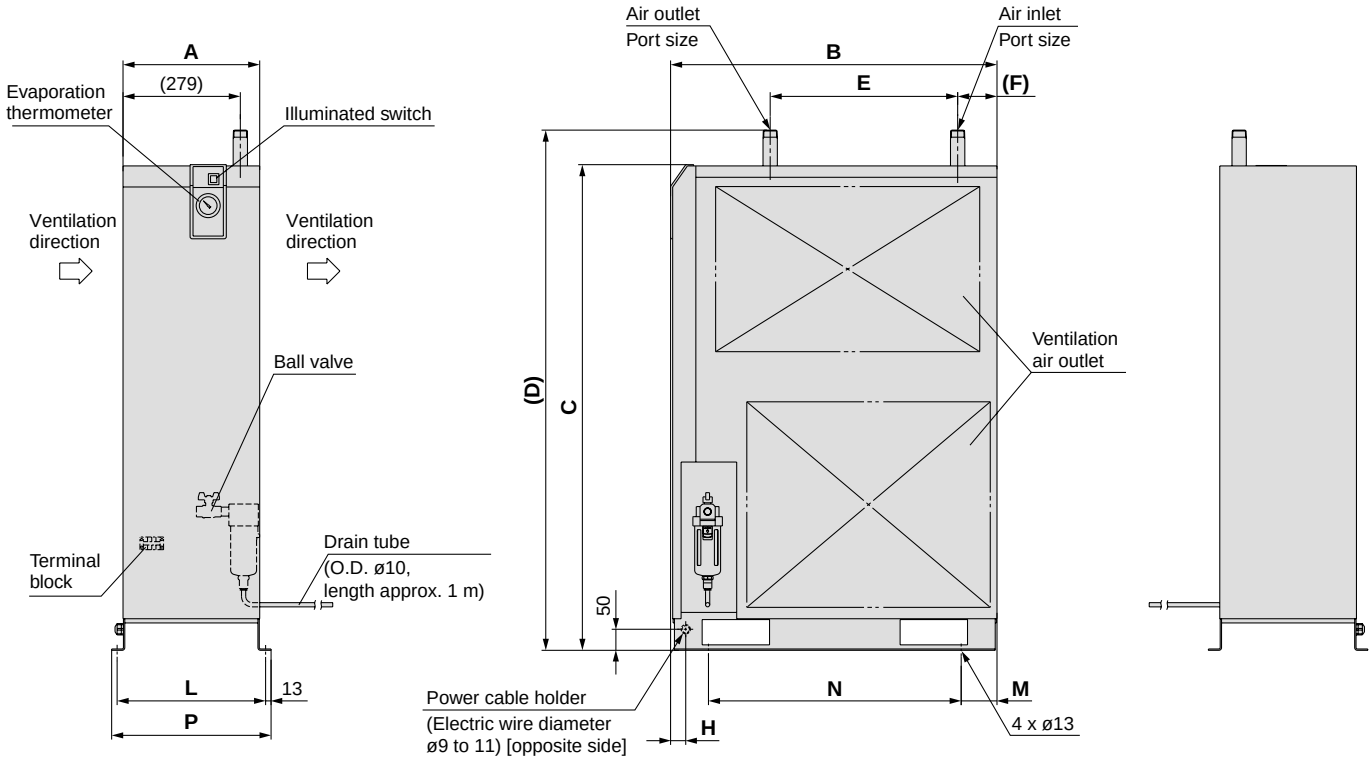

Dimensions (mm)

Model	Port size	A	B	C	D	E	F	H	L	M	N	P
IDU22E	R1	325	775	1153	1235	445	93	46	353	85	600	379
IDU37E	R1 1/2	360	855	1258	1350	550	64		388		680	414

Refrigerant R22
High Temperature Air Inlet
Series IDU□C
55C, 75C
(Inlet air temperature: 60°C, Outlet air pressure dew point: 10°C)

How to Order

IDU 55 C — 3 — Nil / C / L / M / R / T

Size

Size	Compressor size Note)
55	55 kW
75	75 kW

Note) Please note that the above values are for reference only. Therefore, check the actual compressor capacity.

Voltage

Symbol	Voltage
3	Three-phase 200 VAC (50 Hz) 200/220 VAC (60 Hz)

Option

Symbol	Option
Nil	None
C	Anti-corrosive treatment
L	With heavy duty auto drain
M	With motor type auto drain
R	With circuit breaker
T	With terminal block for run & alarm signal

Note 1) Enter alphabetically when multiple options are combined.
However, the following combinations are not possible.
- Combination of L and M are not possible because an auto drain can only be attached to a single option.

Note 2) Refer to page 20 to 23 for further information on options.

JIS Symbol

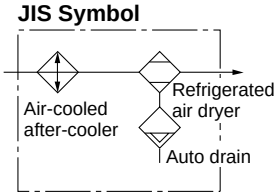

Standard Specifications

Specifications \ Model				High temperature air inlet	
				IDU55C	**IDU75C**
Rated conditions Note 3)	**Air flow capacity m³/min**	**Standard condition (ANR)** Note 1)	**50 Hz**	7.65	10.5
			60 Hz	9.0	12.4
		Com-pressor intake condition Note 2)	**50 Hz**	8.0	10.9
			60 Hz	9.4	12.9
	Inlet air pressure (MPa)			0.7	
	Inlet air temperature (°C)			50	
	Ambient temperature (°C)			32	
	Outlet air pressure dew point (°C)			10	
Operating ranges	**Fluid**			Compressed air	
	Inlet air temperature (°C)			5 to 60	
	Inlet air pressure (MPa)			0.15 to 1.0	
	Ambient temp. (humidity) (°C)			2 to 40 (Relative humidity of 85% or less)	
Electric specifications	**Power supply voltage (frequency)**			Three-phase: 200 VAC (50 Hz) Three-phase: 200/220 VAC (60 Hz)	
	Power consumption (W) 50/60 Hz	**Three-phase 200 V**		1520/1910	2290/2770
	Operating current (A) 50/60 Hz	**Three-phase 200 V**		6.1/6.7	8.5/9.4
Applicable circuit breaker capacity Note 4) **(A)**				15 (200 VAC)	
Condenser				Air-cooled type	
Refrigerant				R22	
Auto drain				Float type (Normally open)	
Port size				R2	
Weight (kg)				160	185
Coating color				Body panel: White 1 Base: Gray 2	
Applicable air compressor output (Reference) In case of screw type (kW)				55	75

Note 1) Air flow capacity under the standard condition (ANR) [atmospheric pressure at 20°C, relative humidity at 65%]
Note 2) Air flow capacity converted by the compressor intake condition [atmospheric pressure at 32°C]
Note 3) Select air dryer according to the model selection method (page 1, 2) for the models beyond the rated specifications.
Note 4) Install a circuit breaker with a sensitivity of 30 mA.

Replacement Parts

Model	IDU55C	IDU75C
Auto drain replacement parts no. Note 6)	AD48	

Note 5) The part number for the auto drain components without including the body part. Body part replacement is impossible.

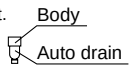

Construction (Air/Refrigerant Circuit)

After the humid hot air that enters the air dryer has been pre-cooled by the air-cooled aftercooler, it is further pre-cooled by exchanging heat with cooled and dehumidified air in the reheater. Then, it passes through the cooler to be cooled by cool CFC which absorbs heat, and water is condensed. The condensed water is automatically exhausted by the auto drain. Finally, it is heated at the reheater by exchanging heat with the hot air coming into the air dryer, and leaves the air dryer as dry warm air.

IDU55C, IDU75C

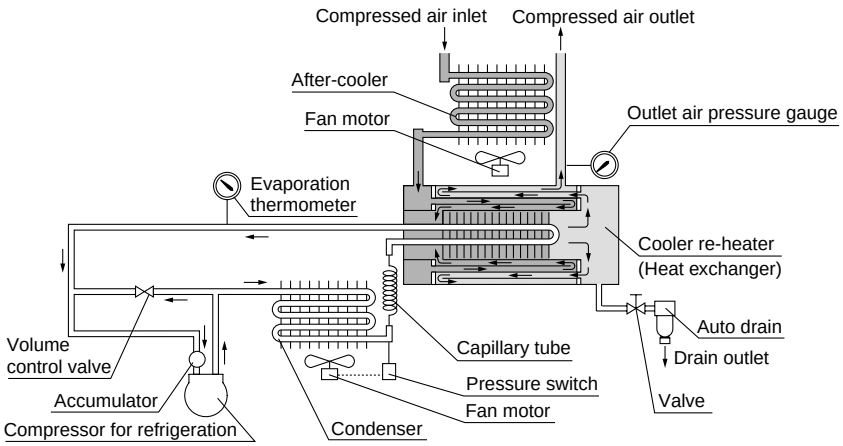

Dimensions

IDU55C, IDU75C

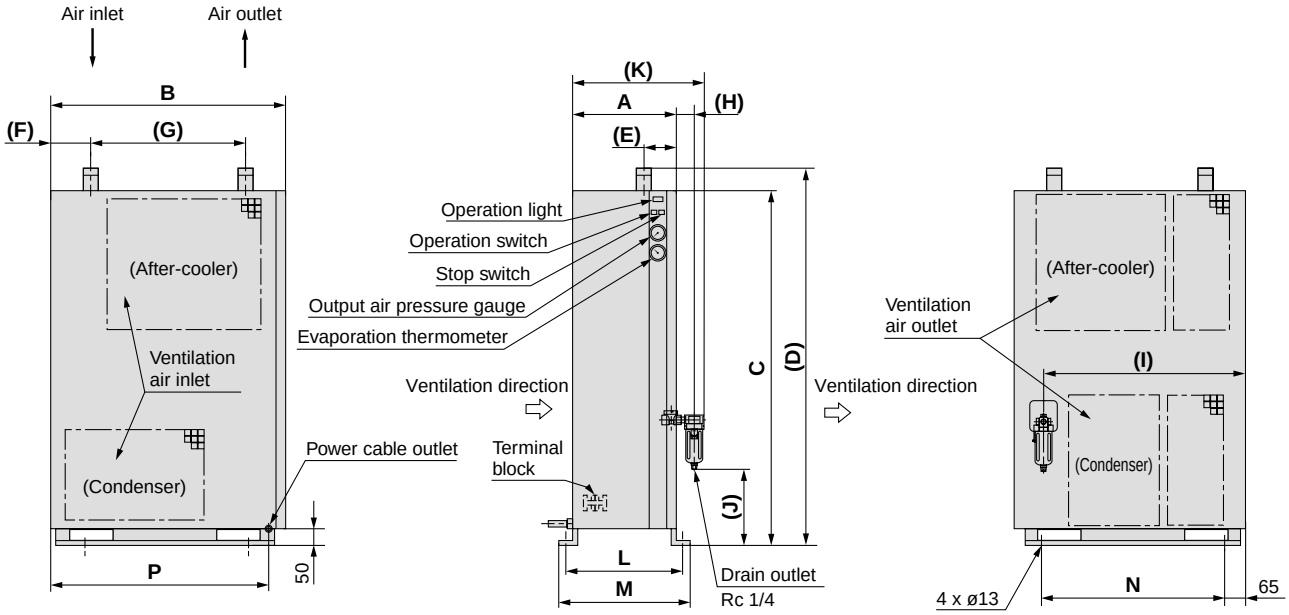

Dimensions (mm)

Model	Port size	A	B	C	D	E	F	G	H	I	J	K	L	M	N	P
IDU55C	R2	405	850	1340	1440	87	155	530	68	722	267	508	433	461	700	800
IDU75C	R2	425	850	1475	1575	87	220	530	68	722	317	528	453	481	700	800

∗ Auto drain is enclosed in the same shipping package as the main body. The customer is required to mount the auto drain to the air dryer.

Options 1

Refer to “How to Order” page 3, 7, 10, 13, 17 for optional models.

A Option symbol
Cool compressed air output

IDF□E all models

Cool outlet air (10°C) can be supplied.
The air flow with this option is smaller than that of the standard dryer. (Refer to the below table.)
If the dryer is used out of the scope of the rated specifications or conditions, select a model according to this catalog and apply the air flow capacity shown in the tables below to the data E.

Note 1) Perform thermal insulation treatment for pipings and equipment installed after the dryer to prevent the formation of condensation.
Note 2) The option “A” cannot be used for the IDF120D to 370B and the IDU series due to the construction of the heat exchanger unit.

Air Flow Capacity

Model		IDF1E	IDF2E	IDF3E	IDF4E
Air flow capacity m^3/min (ANR)	50 Hz	0.085	0.12	0.18	0.26
	60 Hz	0.1	0.14	0.21	0.29

Model		IDF6E	IDF8E	IDF11E	IDF15E
Air flow capacity m^3/min (ANR)	50 Hz	0.32	0.5	0.65	1.2
	60 Hz	0.375	0.55	0.75	1.3

Model		IDF22E	IDF37E	IDF55E	IDF75E
Air flow capacity m^3/min (ANR)	50 Hz	1.7	2.6	3.85	5.35
	60 Hz	1.9	3.05	4.5	6.2

(Rated specification/Conditions): Inlet air pressure: 0.7 MPa, Inlet air temperature: 35°C (IDF1E to 37E), 40°C (IDF55E, 75E)
Outlet air temperature: 10°C

C Option symbol
Anti-corrosive treatment

IDF, IDU all models

This minimizes the corrosion of the copper and copper alloy parts when the air dryer is used in an atmosphere containing hydrogen sulfide or sulfurous acid gas. (Corrosion cannot be completely prevented.)
Special epoxy coating: Copper tube and copper alloy parts.
The coating is not applied on the heat exchanger or around electrical parts, where operation may be affected by the coating.
∗ Corrosion is not covered under warranty.

K Option symbol
For medium air pressure (Auto drain bowl type: Metal bowl with level gauge)

IDF6E to 37E, IDU3E to 15E

The maximum operating pressure is 1.6 MPa (1.4 MPa for IDU15E).
The auto drain is changed from the standard one to one with a medium pressure specification.
A metal bowl with a level gauge which can confirm the water level is used for the auto drain.

Specifications

1. Maximum operating pressure: 1.6 MPa
   1.4 MPa (IDU15E only)
2. Dimensions ··· same as standard products

Replacement Parts

Model	Auto drain replacement parts no.	Note
IDF6E to 37E IDU3E to 11E	IDF-S0086	Assembly of Auto drain: AD48-8-X2110, One-touch fitting: KQ2H10-02S, Insulator
IDU15E	IDF-S0130	Assembly of Bowl assembly: AMG-CA450-D-X20, One-touch fitting: KQ2H10-02S, Insulator

L Option symbol
With heavy duty auto drain (Applicable to medium air pressure)

IDF4E to 75E, IDU3E to 11E IDU22E, 37E

Drainage including dust can also be exhausted.
The float type auto drain used in the standard air dryer is replaced with a heavy duty auto drain (ADH4000-04).

Note) The option L for the IDU15E has the max. operating pressure of 1.4 MPa and includes the mounting frame.

Dimensions (mm)

Model	A	B
IDF4E	55	348
IDF6E, IDU3E	67	
IDF8E, IDF11E	139	378
IDU4E, IDU6E		
IDU8E, IDU11E	149	
IDF15E	47	494

Max. operating pressure: 1.6 MPa
IDF4E to 15E
IDU3E to 11E

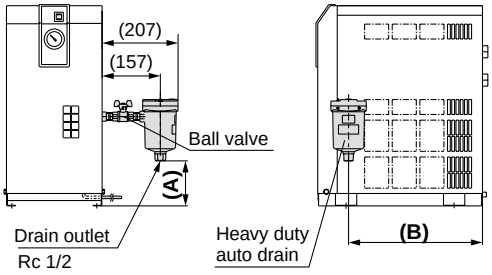

IDF22E to 75E, IDU22E, 37E

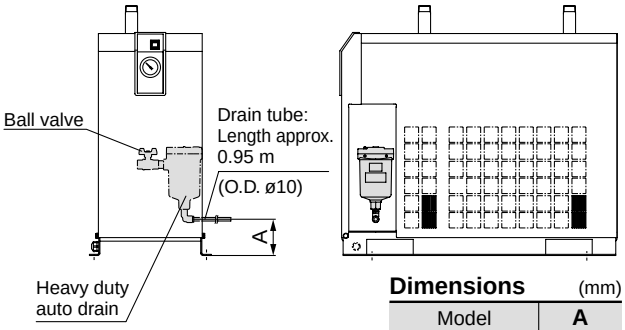

Dimensions (mm)

Model	A
IDF22E, 37E IDU22E, 37E	Approx. 100
IDF55E, 75E	Approx. 50

Note 1) The heavy duty auto drain and the ball valve are both enclosed in the same shipping package as the main body of the air dryer. The customer is required to mount the parts to the air dryer. (Except IDF22E to 75E)
Note 2) The customer will need to supply the fitting no. KQ2L10-04S and tubing no. TU1065BU for the drain piping. (Except IDF22E to 75E)

Replacement Parts: Heavy Duty Auto Drain

Model	Replacement parts no. (Description)	Configuration
IDF4E to 15E IDU3E to 11E	ADH4000-04 (Heavy duty auto drain)	 Heavy duty auto drain
IDF22E to 75E IDU22E, 37E	ADH-E400 (Replacement kit for exhaust mechanism)	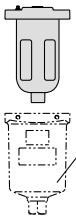 Replacement kit for exhaust mechanism; Housing; Use of mounted one

Options 2

Refer to "How to Order" page 3, 7, 10, 13, 17 for optional models.

M Option symbol

With motor type auto drain

Except IDF1E, 2E, 3E

The float type auto drain used in the standard air dryer is replaced with a motor type auto drain (ADM200).

Air Discharge

Operating air pressure	Air discharge without drainage
0.3 MPa	0.006 m^3 (ANR) per cycle
0.5 MPa	0.010 m^3 (ANR) per cycle
0.7 MPa	0.014 m^3 (ANR) per cycle

∗ The motor type auto drain operates 1 cycle per minute (for 2 seconds).

IDF4E to 15E
IDU3E to 15E

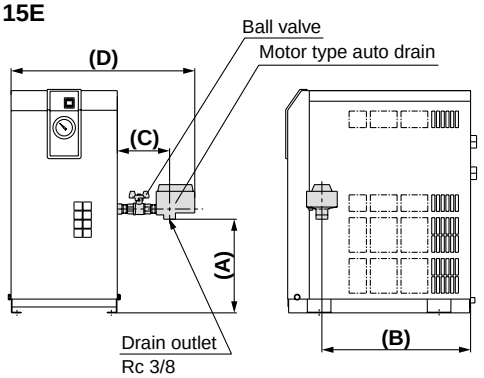

Dimensions (mm)

Model	A	B	C	D
IDF4E	154	348	133	474
IDF6E, IDU3E	166			
IDF8E, 11E	238	378		
IDU4E, 6E				
IDU8E, 11E	288			496
IDF15E	149	494	146	510
IDU15E	65	442	137	530

Note 1) The motor type auto drain and the ball valve are both enclosed in the same shipping package as the main body of the air dryer. The customer is required to mount the auto drain to the air dryer. (Except IDF22E, 37E)
Note 2) The customer will need to supply the fitting no. KQ2L10-03S and tubing no. TU1065BU for the drain piping. (Except IDF22E, 37E)

IDF22E to 75E
IDU22E, 37E

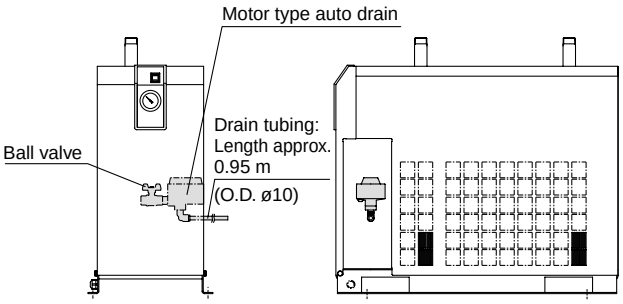

Note) If you require a longer drain tube than the one that is supplied, remove the attached tube and replace it with a longer tube, which should be prepared by the customer. (The fitting connection may prevent drainage from flowing due to a drop in pressure.)

IDF120D to 240D
IDU55C,75C

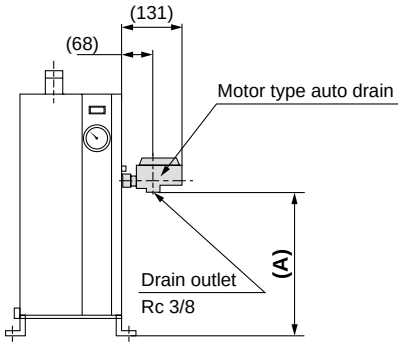

Note 1) Mounting of the IDU55C is shown.
Note 2) The motor type auto drain is both enclosed in the same shipping package as the main body of the air dryer. The customer is required to mount the auto drain to the air dryer.

Dimensions (mm)

Model	A
IDF120D	464
IDF150D	464
IDF190D	526
IDF240D	690
IDU55C	417
IDU75C	463

Replacement Parts: Motor Type Auto Drain Assembly Note)

Voltage	Replacement parts no.	Note
Single-phase 100 VAC (50 Hz) 100/110 VAC (60 Hz)	IDF-S0087	Motor type auto drain: AMD200-041 Plug housing assembly: 173090-2 Receptacle: 173707-1 Rubber plug: Assembly of 172888-2
Single-phase 200 VAC (50 Hz) Three-phase 200/220 VAC (60 Hz)	IDF-S0090	Motor type auto drain: AMD200-042 Plug housing assembly: 173090-2 Receptacle: 173707-1 Rubber plug: Assembly of 172888-2

Note) Including electric wire with connector on the end.

Options 3

Refer to "How to Order" page 3, 7, 10, 13, 17 for optional models.

R Option symbol

With circuit breaker

Except IDF1E, 2E, 3E

A circuit breaker with cover is attached to the side of the air dryer. This saves additional electrical wiring at the time of installation. (The IDF370B does not include the electrical leakage detection function.)

IDF4E to 15E
IDU3E to 15E

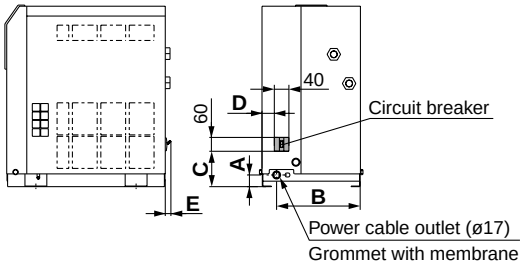

Dimensions (mm)

Model	A	B	C	D	E
IDF4E, 6E, 8E, 11E	32	230	97	34	15
IDF15E	43	258	102	82	—
IDU3E, 4E, 6E	32	230	97	34	15
IDU8E	42		100	37	—
IDU11E				75	
IDU15E	43	258		84	

IDF22E to 75E
IDU22E, 37E

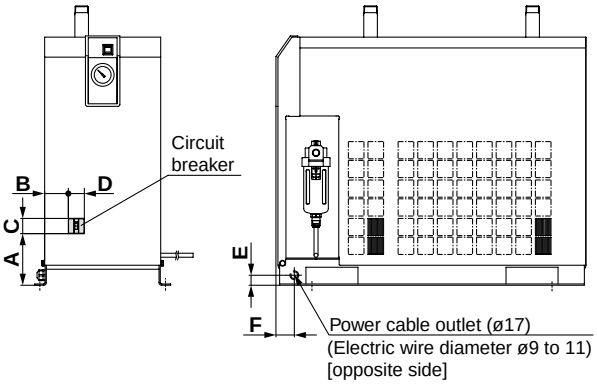

Dimensions (mm)

Model	A	B	C	D	E	F
IDF22E-20	125	59	60	40	25	46
IDF37E-20						
IDF22E-30		39		60		
IDF37E-30						
IDF55E-30	148	81			50	36
IDF75E-30	133	73				
IDU22E-30	151	74	60	60	50	46
IDU37E-30	146	122				

IDF120D to 240D
IDU55C, 75C

IDF370B

Note) The IDF370B is available with X202.

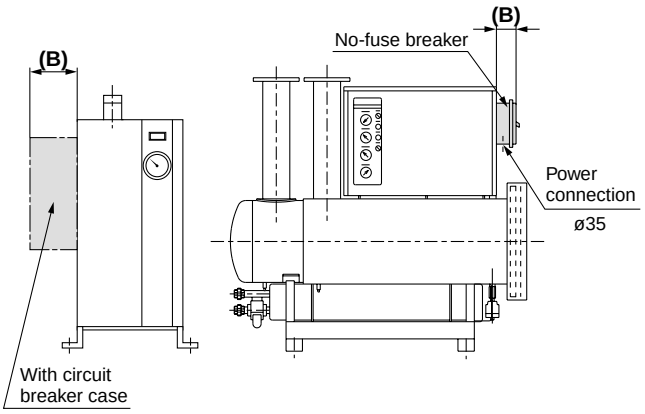

Dimensions (mm)

Model	A
IDF120D	69
IDF150D	94
IDF190D	95
IDF240D	
IDF370B	156

Breaker Capacity and Sensitivity Current

Voltage	Model	Breaker capacity	Sensitivity current
100 V type	**IDF4E-10, IDF6E-10 IDF8E-10, IDF11E-10, IDF15E-10**	10 A	30 mA
	IDU3E-10, IDU4E-10, IDU6E-10 IDU8E-10, IDU11E-10, IDU15E-10		
200 V type	**IDF4E-20, IDF6E-20 IDF8E-20, IDF11E-20**	5 A	
	IDU3E-20, IDU4E-20 IDU6E-20, IDU8E-20, IDU11E-20		
	IDF15E-20, IDF22E-20, IDF37E-20 IDU15E-20 IDF22E-30, IDF37E-30 IDF55E-30 IDU22E-30, IDU37E-30	10 A	
	IDF75E-30, IDU55C-3, IDU75C-3	15 A	
	IDF120D	30 A	
	IDF150D	45 A	
	IDF190D	60 A	
	IDF240D	75 A	
	IDF370B	80 A	—

Options 4

Refer to "How to Order" page 3, 7, 10, 13, 17 for optional models.

S Option symbol

Power supply terminal block connection

IDF1E-10 to 15E-10, IDU3E-10 to IDU15E-10

The option allows the connection of a power cable to a terminal block.
200 V specification is equipped as standard.

IDF1E-10 to 3E-10

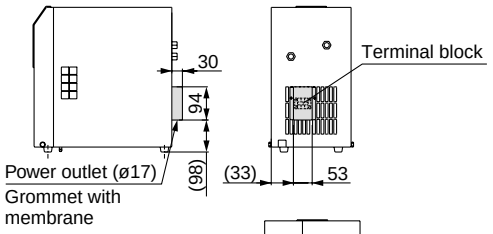

IDF4E-10 to 15E-10
IDU3E-10 to 15E-10

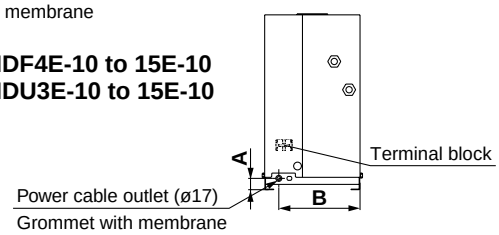

Dimensions (mm)

Model	A	B
IDF4E, 6E, 8E, 11E	32	230
IDF15E	43	258
IDU3E, 4E, 6E	32	230
IDU8E, 11E	42	230
IDU15E	43	258

T Option symbol

With terminal block for power supply, run & alarm signal and remote operation

IDF4E to 15E, IDU3E to 15E

Besides terminals for the power supply, terminals for the operating signal and the error signal are also available. (No-voltage contact)
Also, in the case of remote control, operate it from the power supply side while the air dryer switch remains ON.

IDF4E to 15E
IDU3E to 15E

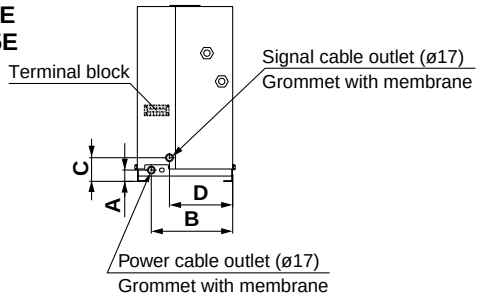

Contact capacity: Operating signal ... 220 VAC, 6 A 24 VDC, 6 A
Error signal ... 220 VAC, 0.5 A

Minimum current value: 24 V, 300 mA (AC/DC) for operating and error signals.

Note) Please be sure to confirm the electric circuits with the drawings or instruction manual before using the operating and error signals.

Dimensions (mm)

Model	A	B	C	D
IDF4E, 6E, 8E, 11E	32	230	67	179
IDF15E	43	258	77	158
IDU3E, 4E, 6E	32	230	67	179
IDU8E, 11E	42	230	77	136
IDU15E	43	258	77	158

T Option symbol

With terminal block for power supply, run & alarm signal and remote operation

IDF22E to 75E, IDU22E, 37E
IDU55C, 75C

IDF22E to 75E, IDU22E, 37E

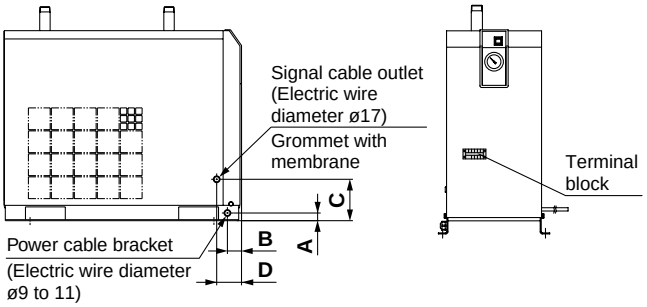

Contact capacity: Operating signal ... 220 VAC, 5 A 24 VDC, 5 A
Error signal ... 220 VAC, 1 A 24 VDC, 0.5 A

Minimum current value: 20 V, 5 mA (AC/DC) for operating and error signals.

Dimensions (mm)

Model	A	B	C	D
IDF22E, 37E	25	46	135	81
IDF55E, 75E	50	36	207	81
IDU22E, 37E	50	46	166	81

IDU55C, 75C

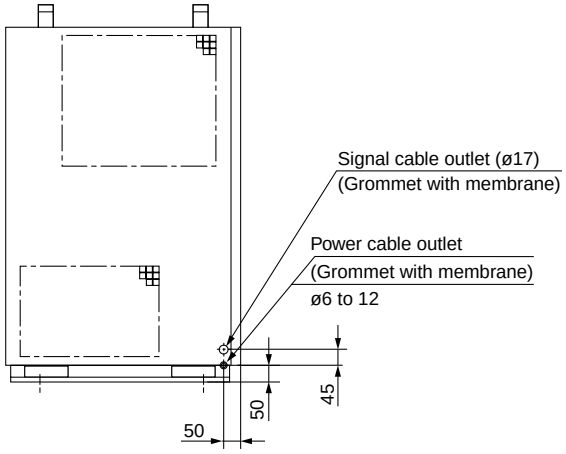

Contact capacity: Operating signal ... 220 VAC, 6 A 24 VDC, 6 A
Error signal ... 220 VAC, 0.5 A

Minimum current value: 24 V, 300 mA (AC/DC) for operating and error signals.

Options 5

Refer to "How to Order" page 3, 7, 10, 13, 17 for optional models.

V Option symbol
With timer-type solenoid valve — IDU3E to 11E

Drainage is discharged by controlling a solenoid valve with a timer.
A strainer for solenoid valve protection and stop valve are also included.

Maximum operating pressure: 1.6 MPa

∗ The timer-type solenoid valve actuates once (for 0.5 s) every 30 s.

Replacement Parts

Model	Part No.	Note
IDU3E to 11E-23	IDF-S0198	230 VAC

W Option symbol
Water-cooled condenser — IDF120D to 240D

It can be used in a high temperature environment (max. 43°C) without decreasing air flow capacity. It can also be used in an enclosed environment without increasing the ambient temperature. The IDF370B has this option as standard.

Model	IDF120D	IDF150D	IDF190D	IDF240D
Condenser	Shell and tube type			
Cooling water flow (ℓ/min) Note 1)	50	65	80	90
Cooling tower performance (RT) Note 2)	5	7.5	7.5	7.5
Water flow regulator	Pressure style automatic water supply valve			
Fluid port size (union)	1/2B		1B	

Note 1) Value when cooling water inlet temperature is 32°C and with rated load
Note 2) Calculated at 1 RT = 3300 kcal/h

Dimensions (mm)

Model	A	B	C	D	E
IDF120D IDF150D	180	250	160	90	225
IDF190D IDF240D	180	250	160	48	273

IDF120D to 240D

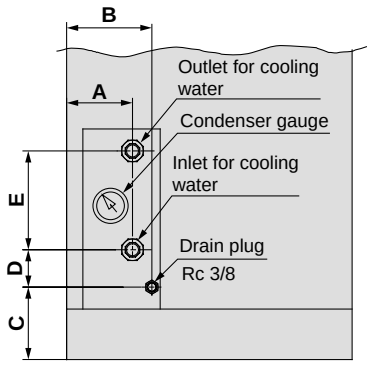

Optional Accessories

Specifications

Description	Features	Specifications	Applicable dryer	Dimensions
Separately installed power transformer Note 1), 2) 	Power supply and voltage for those other than the standard.	Max. ambient temperature 40°C (Relative humidity 85% or less)	IDF1E to 10 to IDF15E-10, IDF22E-20/30 IDF37E-20/30, IDF55E-30, IDF75E-30 IDU3E-10 to 15E-10, IDU22E-30, IDU37E-30 IDU55C-3, IDU75C-3, IDF120D to 240D-3, IDF370B-3	Page 27, 28
Dedicated base for separately installed power transformer Note 2) [Separately installed transformation is not attached. Order separately.]	A dedicated base for integrating the separately installed power transformer and the air dryer.	—	IDF4E to 15E-10 IDF22E-20/30, IDF37E-20/30 IDF55E-30, IDF75E-30 IDU3E to 15E-10	Page 29
Dust-protecting filter set 	Prevents a decline in the performance of an air dryer, even in a dusty atmosphere.	Max. ambient temperature 40°C	IDF1E to 75E IDU3E to 37E IDU55C, 75C	Page 30
Bypass piping set 	Easy bypass piping (connect this set to the air dryer), allowing substantial reduction in the installation time.	Max. operating pressure Note 3) 1.0 MPa Max. operating temperature IDF: 60°C IDU: 80°C		Page 31, 32
Foundations bolt set 	Bolts for fixing the air dryer to the foundations. Easy to secure by striking the axle.	Stainless steel	IDF4E to 75E IDU3E to 37E IDU55C,75C	Page 32
Piping adapter 	Adaptor which converts the thread type of an IN/OUT fitting for an air dryer.	Copper alloy	IDF1E to 75E IDU3E to 37E IDU55C, 75C	

Note 1) If the power transducer is used for the IDF1E to 15E and IDU3E to 15E, select the dryer of 100 V.
Note 2) If using a power transducer with the IDF120D to 240D, a built-in power transducer type is also available. (Refer to "How to Order" on page 10.)
Note 3) Not available for medium air pressure. Prepare a bypass piping set suitable for the specification.

How to Order

[Separately installed power transformer]

Single-phase type

IDF — TR 500 — 2

Capacity

Symbol	Applicable dryer	Capacity
500	IDF1E-10 to IDF8E-10 IDU3E-10, IDU4E-10, IDU8E-10	500 VA
1000	IDF11E-10, IDF15E-10 IDU6E-10, IDU11E-10, IDU15E-10	1 kVA
2000	IDF22E-20, IDF37E-20	2 kVA

Source voltage

Symbol	Inlet voltage	Outlet voltage	Type
1	110 VAC (50 Hz) 110 V to 120 VAC (60 Hz)	100 VAC (50 Hz) 100 to 110 VAC (60 Hz)	Single-phase
2	200, 220, 230, 240 VAC (50 Hz) 200 to 260 VAC (60 Hz)		
3	380, 400, 415 VAC (50 Hz) 380 to 420 VAC (60 Hz)		
4	420, 440, 480 VAC (50 Hz) 420 to 520 VAC (60 Hz)		
9	220 VAC (50 Hz) 220 to 240 VAC (60 Hz)	200 VAC (50 Hz) 200 to 220 VAC (60 Hz)	Single-phase
10	380, 400, 415 VAC (50 Hz) 380 to 400, 400 to 415, 415 to 440 VAC (60 Hz)		
11	440, 460 VAC (50 Hz) 440 to 460, 460 to 500 VAC (60 Hz)		

Note) Refer to page 27 and 28 for dimensions.

Three-phase type

IDF — TR 1700 — 5

Capacity

Symbol	Applicable dryer	Capacity
1700	IDF22E-30, IDF37E-30 IDU22E-30, IDU37E-30	1.7 kVA
4000	IDF55E-30, IDF75E-30 IDU55C-3, IDU75C-3	4 kVA
7000	IDF120D	7 kVA
9000	IDF150D	9 kVA
14000	IDF190D,240D	14 kVA
18000	IDF370B	18 kVA

Source voltage

Symbol	Inlet voltage	Outlet voltage	Type
5	220 VAC (50 Hz) 220 to 240 VAC (60 Hz)	200 AC (50 Hz) 200 to 220 VAC (60 Hz)	Three-phase
6	380, 400, 415 VAC (50 Hz) 380 to 440 VAC (60 Hz)		
7	440, 460 VAC (50 Hz) 440 to 500 VAC (60 Hz)		
8	220, 240, 380, 400, 415, 440 VAC (50/60 Hz)	200 VAC (50/60 Hz)	

Note) Refer to page 28 for dimensions.

How to Order

[Dedicated base for separately installed power transformer]

IDF — TB 403

Size

Symbol	Applicable dryer
403	IDF4E to 11E, IDU3E to 6E
404	IDF15E
405	IDF22E
406	IDF37E
409	IDF55E, IDF75E

Note) Not available for the IDF1E to 3E, IDE22E, 37E, 55C, and 75C.
Refer to page 29 for the dimensions.

IDU — TB 407

Size

Symbol	Applicable dryer
407	IDU8E, IDU11E
408	IDU15E

[Dust-protecting filter set]

IDF — FL 201

Applicable dryer

Symbol	Applicable dryer
200 Note)	IDF1E, 2E
201 Note)	IDF3E
202	IDF4E
203	IDF6E, IDU3E
204	IDF8E, IDU4E
205	IDF11E, IDU6E
206	IDF15E
207	IDF22E
208	IDF37E
213	IDF55E
214	IDF75E

Note) In the case of "Option S", model no. will be different.
Please consult with us separately.
Refer to page 30 for dimensions.

IDF — FL 120 D

Applicable dryer

Symbol	Applicable dryer
120	IDF120D
150	IDF150D
190	IDF190D
240	IDF240D

IDU — FL 210

Applicable dryer

Symbol	Applicable dryer
210	IDU8E
211	IDU11E
212	IDU15E

IDU — FL 55 C

Applicable dryer

Symbol	Applicable dryer
55	IDU55C
75	IDU75C

[Bypass piping set (Rc, R thread)]

IDF — BP 302

Applicable dryer

Symbol	Applicable dryer	Thread type
300	IDF1E	Rc
301	IDF2E	
302	IDF3E	
303	IDF4E	
304	IDF6E to 11E	
316	IDF15E	
317	IDF22E	R
318	IDF37E	
325	IDF55E IDF75E	

Note) Not applicable to the medium air pressure spec. (max. operating pressure 1.6 MPa).
Supplied by customer.

IDU — BP 305

Applicable dryer

Symbol	Applicable dryer
305	IDU3E
306	IDU4E
307	IDU6E
320	IDU8E, IDU11E
322	IDU15E
336	IDU22E
337	IDU37E

Refer to page 31 and 32 for the dimensions of bypass piping set.

IDU — BP 55 C

Applicable dryer

Symbol	Applicable dryer
55	IDU55C
75	IDU75C

[Foundations bolt set]

IDF — AB 500

Applicable dryer

Symbol	Applicable dryer
500	IDF4E to 75E
	IDU3E to 15E
501	IDU22E, 37E
	IDU55C, 75C

Note) Refer to page 32 for dimensions.

[Piping adapter]

IDF — AP 601

Applicable dryer

Symbol	Thread type and port size		Applicable dryer
	Male thread side **A**	Female thread side **B**	
601	R 1/2	NPT 1/2	IDF4E, IDU4E
603	R 3/4	NPT 3/4	IDF6E to 11E, IDU6E to 11E
604	NPT 1	Rc 1	IDF22E, IDU22E
605	R 1	NPT 1	IDF15E, IDU15E
606	NPT 1 1/2	Rc 1 1/2	IDF37E, IDU37E
607	NPT 2	Rc 2	IDF55E, 75E, IDU55C, 75C
609	R 3/8	NPT 3/8	IDF1E to 3E, IDU3E

Note) Refer to page 32 for dimensions.

Optional Accessories

Specifications / Dimensions

[Separately installed power transformer]

IDF-TR□−1

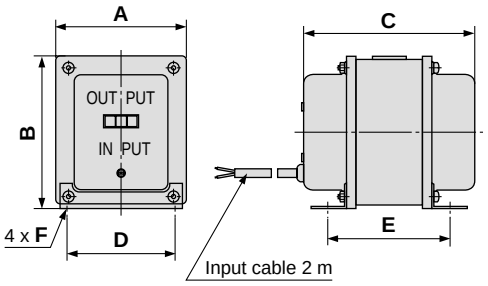

Specifications / Dimensions (mm)

Transformer	Applicable dryer	Capacity	Type	Inlet voltage	Outlet voltage	A	B	C	D	E	F	Weight
IDF-TR500-1	IDF1E-10 to 8E-10 IDU3E-10, 4E-10, 8E-10	500 VA	Single-phase Single-turn	110 VAC (50 Hz) 110 to 120 VAC (60 Hz)	100 VAC (50 Hz) 100 to 110 VAC (60 Hz)	78	94	100	64	75	4.2 x 7 (Long hole)	1.5 kg
IDF-TR1000-1	IDF11E-10, 15E-10 IDU6E-10, 11E-10, 15E-10	1 kVA				104	122	134	75	114	4.2 x 9 (Long hole)	4 kg

IDF-TR□−2

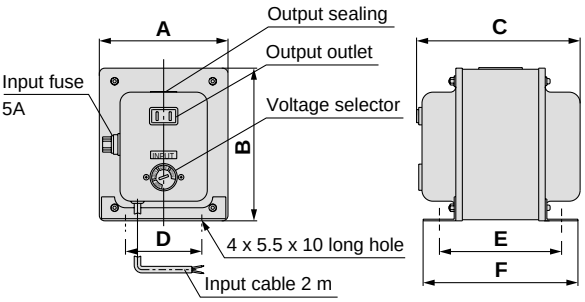

Specifications / Dimensions (mm)

Transformer	Applicable dryer	Capacity	Type	Inlet voltage	Outlet voltage	A	B	C	D	E	F	Weight
IDF-TR500-2	IDF1E-10 to 8E-10 IDU3E-10, 4E-10, 8E-10	500 VA	Single-phase Single-turn	200, 220 230, 240 VAC (50 Hz) 200 to 260 VAC (60 Hz)	100 VAC (50 Hz) 100 to 110 VAC (60 Hz)	118	140	163	70	112	142	6 kg
IDF-TR1000-2	IDF11E-10, 15E-10 IDU6E-10, 11E-10, 15E-10	1 kVA						208	90	157	187	10 kg

IDF-TR□−3, 4

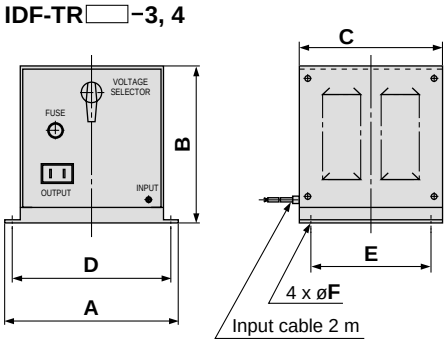

Specifications / Dimensions (mm)

Transformer	Applicable dryer	Capacity	Type	Inlet voltage	Outlet voltage	A	B	C	D	E	F	Weight
IDF-TR500-3	IDF1E-10 to 8E-10 IDU3E-10, 4E-10, 8E-10	500 VA	Single-phase Single-turn	380, 400, 415 VAC (50 Hz) 380 to 420 VAC (60 Hz)	100 VAC (50 Hz) 110 VAC (60 Hz)	230	207	190	210	160	9	15 kg
IDF-TR1000-3	IDF11E-10, 15E-10 IDU6E-10, 11E-10, 15E-10	1 kVA										
IDF-TR500-4	IDF1E-10 to 8E-10 IDU3E-10, 4E-10, 8E-10	500 VA		420, 440, 480 VAC (50 Hz) 420 to 520 VAC (60 Hz)								22 kg
IDF-TR1000-4	IDF11E-10, 15E-10 IDU6E-10, 11E-10, 15E-10	1 kVA										

Specifications / Dimensions

[Separately installed power transformer]

IDF-TR1700-5

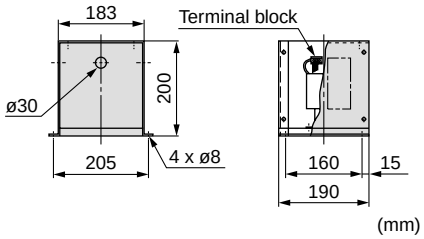

Specifications / Dimensions

Transformer	Applicable dryer	Capacity	Type	Inlet voltage	Outlet voltage	Weight
IDF-TR1700-5	IDF22E-30 IDF37E-30 IDU22E-30 IDU37E-30	1.7 kVA	Three-phase Single-turn	220 VAC (50 Hz) 220 to 240 VAC (60 Hz)	200 V (50 Hz) 200 to 220 V (60 Hz)	9 kg

IDF-TR1700-6,7

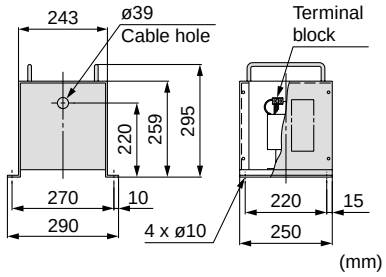

Specifications / Dimensions

Transformer	Applicable dryer	Capacity	Type	Inlet voltage	Outlet voltage	Weight
IDF-TR1700-6	IDF22E-30 IDF37E-30 IDU22E-30 IDU37E-30	1.7 kVA	Three-phase Single-turn	380, 400, 415 VAC (50 Hz) 380 to 400, 400 to 415, 415 to 440 VAC (60 Hz)	200 V (50 Hz) 200 to 220 V (60 Hz)	18 kg
IDF-TR1700-7				440, 460 VAC (50 Hz) 440 to 460, 460 to 500 VAC (60 Hz)		

IDF-TR2000-9

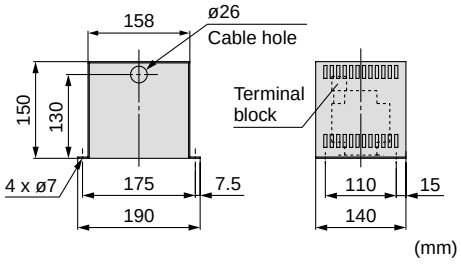

Specifications / Dimensions

Transformer	Applicable dryer	Capacity	Type	Inlet voltage	Outlet voltage	Weight
IDF-TR2000-9	IDF22E-20 IDF37E-20	2 kVA	Single-phase Single-turn	220 VAC (50 Hz) 220 to 240 VAC (60 Hz)	200 VAC (50 Hz) 200 to 220 VAC (60 Hz)	5 kg

IDF-TR2000-10,11

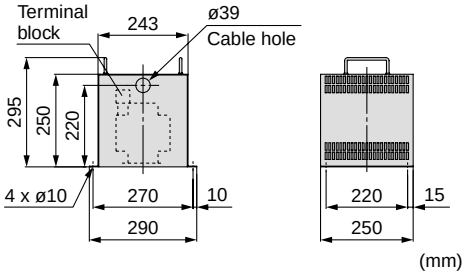

Specifications / Dimensions

Transformer	Applicable dryer	Capacity	Type	Inlet voltage	Outlet voltage	Weight
IDF-TR2000-10	IDF22E-20 IDF37E-20	2 kVA	Single-phase Single-turn	380, 400, 415 VAC (50 Hz) 380 to 400, 400 to 415, 415 to 440 VAC (60 Hz)	200 VAC (50 Hz) 200 to 220 VAC (60 Hz)	20 kg
IDF-TR2000-11				440, 460 VAC (50 Hz) 440 to 460, 460 to 500 VAC (60 Hz)		

IDF-TR4000-5,6,7

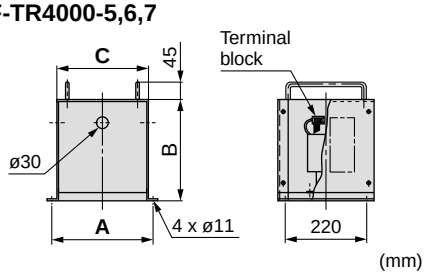

Specifications / Dimensions

Transformer	Applicable dryer	Capacity	Type	Inlet voltage	Outlet voltage	A	B	C	Weight
IDF-TR4000-5	IDF55E-30 IDF75E-30 IDU55C-3 IDU75C-3	4 kVA	Three-phase Single-turn	220 V (50 Hz) 220 to 240 V (60 Hz)	200 V (50 Hz) 200 to 220 V (60 Hz)	275	259	240	14 kg
IDF-TR4000-6				380, 400, 415 V (50 Hz) 380 to 400, 400 to 415, 415 to 440 V (60 Hz)	200 V (50 Hz) 200 to 220 V (60 Hz)	355	299	320	35 kg
IDF-TR4000-7				440, 460 V (50 Hz) 440 to 460, 460 to 500 V (60 Hz)	200 V (50 Hz) 200 to 220 V (60 Hz)	355	299	320	42 kg

IDF-TR□−8

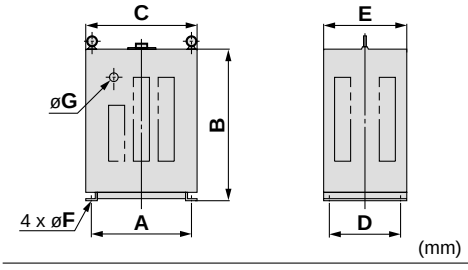

Specifications / Dimensions

Transformer	Applicable dryer	Capacity	Type	Inlet voltage	Outlet voltage	A	B	C	D	E	F	G	Weight
IDF-TR7000-8	IDF120D	7 kVA	Three-phase Double-turn	220, 240, 380, 400, 415, 440 V (50/60 Hz)	200 V (50/60 Hz)	360	540	400	260	300	11	30	94 kg
IDF-TR9000-8	IDF150D	9 kVA				400	650	450	300	350	13	40	109 kg
IDF-TR14000-8	IDF190D, 240D	14 kVA				400	650	450	300	350	13	40	152 kg
IDF-TR18000-8	IDF370B	18 kVA				400	650	450	300	350	13	40	179 kg

Optional Accessories

Dimensions

[Dedicated base for separately installed power transformer]
IDF4E to 75E
IDU3E to 15E

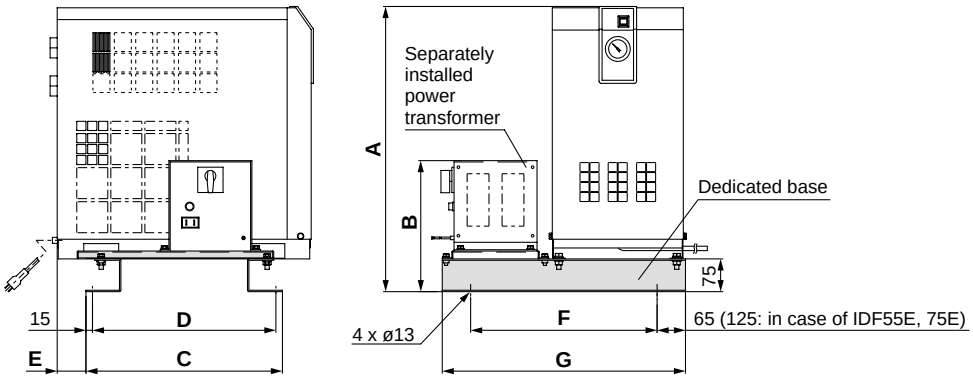

IDF-TB□ / Dimensions

(mm)

Part No.	Applicable dryer	Applicable transformer	A	B	C	D	E	F	G	Unit weight (kg)	Reference weight (including air dryer and transformer) (kg)
IDF-TB403	IDF4E-10	IDF-TR500-1	573	171	345	315	45	385	515	6	29.5
		IDF-TR500-2		217							34
		IDF-TR500-3		284							43
		IDF-TR500-4									50
	IDF6E-10 IDU3E-10	IDF-TR500-1		171							30.5
		IDF-TR500-2		217							35
		IDF-TR500-3		284							44
		IDF-TR500-4									51
	IDF8E-10 IDU4E-10	IDF-TR500-1	643	171	370	340					34.5
		IDF-TR500-2		217							39
		IDF-TR500-3		284							48
		IDF-TR500-4									55
	IDF11E-10 IDU6E-10	IDF-TR1000-1		199							38
		IDF-TR1000-2		217							44
		IDF-TR1000-3		284							49
		IDF-TR1000-4									56
IDF-TB404	IDF15E-10	IDF-TR1000-1	653	215	450	420	66	427	557	7	57
		IDF-TR1000-2		233							63
		IDF-TR1000-3		300							68
		IDF-TR1000-4									75
IDF-TB405	IDF22E-30	IDF-TR1700-5	773	300	630	600	70	675	805	12	75
		IDF-TR1700-6,7		352							84
	IDF22E-20	IDF-TR2000-9		243							71
		IDF-TR2000-10,11		343							86
IDF-TB406	IDF37E-30	IDF-TR1700-5		300	710	680				13	84
		IDF-TR1700-6,7		352							93
	IDF37E-20	IDF-TR2000-9		243							80
		IDF-TR2000-10,11		343							95
IDF-TB409	IDF55E-30	IDF-TR4000-5	943	397	730	750	60		925	15	129
		IDF-TR4000-6		437							150
		IDF-TR4000-7									157
	IDF75E-30	IDF-TR4000-5	1043	397							145
		IDF-TR4000-6		437							166
		IDF-TR4000-7									173

IDU-TB□ / Dimensions

(mm)

Part No.	Applicable dryer	Applicable transformer	A	B	C	D	E	F	G	Unit weight (kg)	Reference weight (including air dryer and transformer) (kg)
IDU-TB407	IDU8E-10	IDF-TR500-1	934	171	370	340	45	475	605	6	51.5
		IDF-TR500-2		217							56
		IDF-TR500-3		284							65
		IDF-TR500-4									72
	IDU11E-10	IDF-TR1000-1	984	199							57
		IDF-TR1000-2		217							63
		IDF-TR1000-3		284							68
		IDF-TR1000-4									75
IDU-TB408	IDU15E-10	IDF-TR1000-1	1035	215	540	510	31	487	617	10	85
		IDF-TR1000-2		233							91
		IDF-TR1000-3		300							96
		IDF-TR1000-4									103

Dimensions

[Dust-protecting filter set]

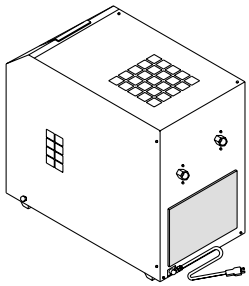

(IDF-FL200, 201)

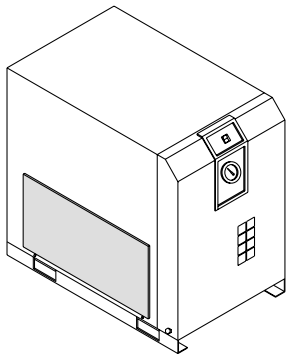

(IDF-FL202 to 214)

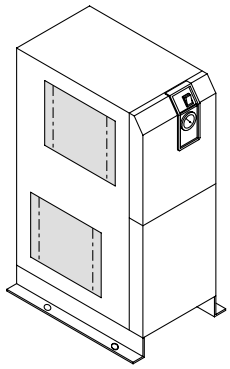

(IDU-FL210 to 212)

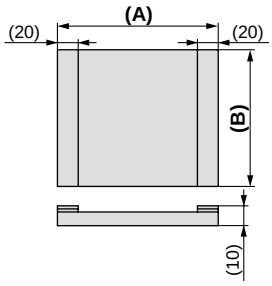

Dimensions (mm)

Part No.	Applicable dryer	A	B	Weight (g)
IDF-FL200	IDF1E, 2E	220	150	20
IDF-FL201	IDF3E		200	30
IDF-FL202	IDF4E	310	195	45
IDF-FL203	IDF6E, IDU3E	375		55
IDF-FL204	IDF8E, IDU4E	340	265	70
IDF-FL205	IDF11E, IDU6E	375		75
IDF-FL206	IDF15E	310	270	70
IDF-FL207	IDF22E	420	315	100

∗ A filter set for the IDF-FL200 to 214 consists of 1 filter.
A filter set for the IDU-FL210 to 212, 215, and 216 consists of 2 filters.

Dimensions (mm)

Part No.	Applicable dryer	A	B	Weight (g)
IDF-FL208	IDF37E	550	365	140
IDF-FL213	IDF55E	720	400	175
IDF-FL214	IDF75E	610	560	190
IDU-FL210	IDU8E	375	265	75
		375	265	75
IDU-FL211	IDU11E	375	265	75
		360	320	90
IDU-FL212	IDU15E	310	270	70
		440	375	120
IDU-FL215	IDU22E	420	315	100
		555	415	170
IDU-FL216	IDU37E	550	365	140
		580	540	230

Dimensions (mm)

Part No.	Applicable dryer	A	B
IDF-FL120D	IDF120D	360	420
		440	420
IDF-FL150D	IDF150D	360	420
		440	420
IDF-FL190D	IDF190D	250	480
		750	480
IDF-FL240D	IDF240D	440	670
		600	670
IDU-FL55C	IDU55C	605	475
		600	410
IDU-FL75C	IDU75C	625	550
		640	510

∗ A filter set for the IDU-FL55C, 75C consists of 1 filter.
A filter set for the IDF-FL120D to 240D consists of 4 filters.

Optional Accessories

Dimensions

[Bypass piping set]
IDF1E to 3E

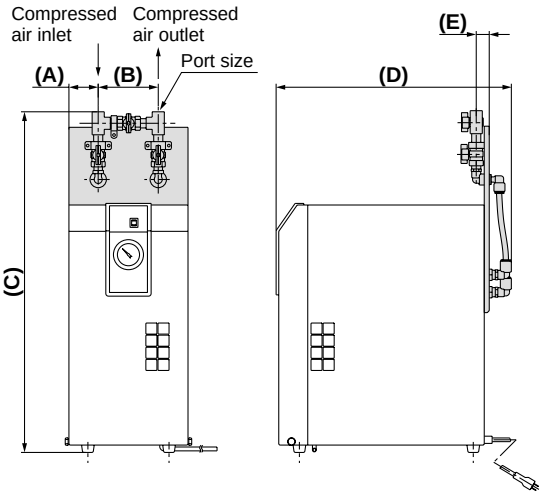

Dimensions (mm)

Part No.	Applicable dryer	Port size Rc	A	B	C	D	E	Weight (kg)
IDF-BP300	IDF1E	3/8	56	114	549	440	21	1.5
IDF-BP301	IDF2E				628	443		1.6
IDF-BP302	IDF3E				642	445		

IDF4E to 15E
IDU3E to 6E

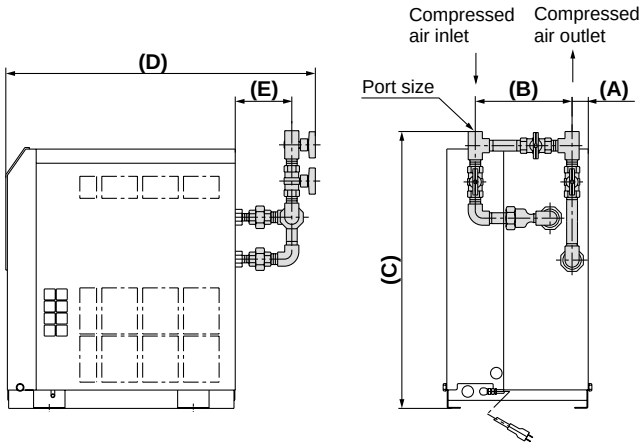

Dimensions (mm)

Part No.		Applicable dryer	Port size Rc	A	B	C	D	E	Weight (kg)
IDF	**IDF-BP303**	IDF4E	1/2	31	175	531	595	110	2.3
	IDF-BP304	IDF6E	3/4		187	555	617	129	3.3
		IDF8E				627	647		
		IDF11E							
	IDF-BP316	IDF15E	1	41	210	710	774	136	5.3
IDU	**IDU-BP305**	IDU3E	3/8	31	202	506	572	100	1.6
	IDU-BP306	IDU4E	1/2		175	603	625	110	2.3
	IDU-BP307	IDU6E	3/4		187	627	647	129	3.3

IDF22E, 37E
IDU22E, 37E

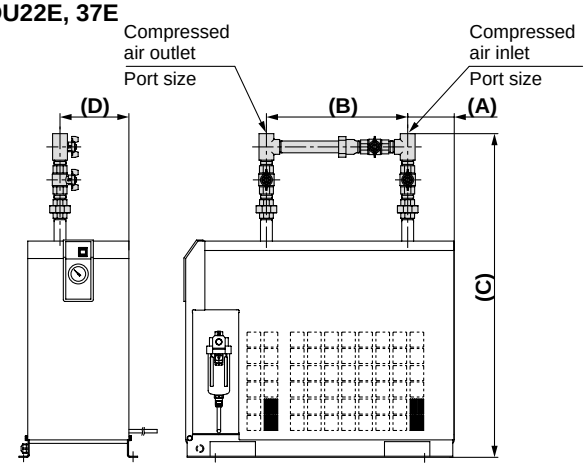

Dimensions (mm)

Part No.	Applicable dryer	Port size Rc	A	B	C	D	Weight (kg)
IDF-BP317	IDF22E	1	134	405	928	198	4.4
IDF-BP318	IDF37E	1 1/2			980		7.7
IDU-BP336	IDU22E	1	93	445	1465	46	4.5
IDU-BP337	IDU37E	1 1/2	64	550	1635	70	8.0

IDF55E, 75E

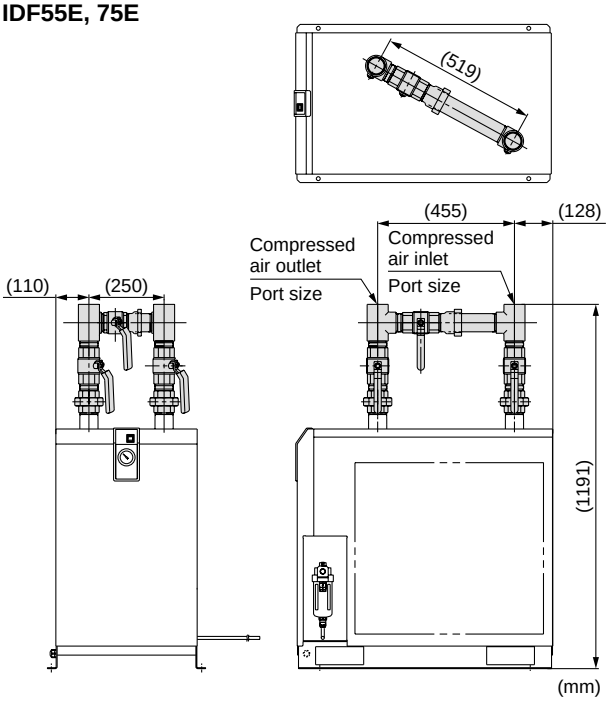

Port Size

Part No.	Applicable dryer	Port size Rc	Weight (kg)
IDF-BP325	IDF55E IDF75E	2	12.3

Dimensions

[Bypass piping set]
IDU8E to 15E

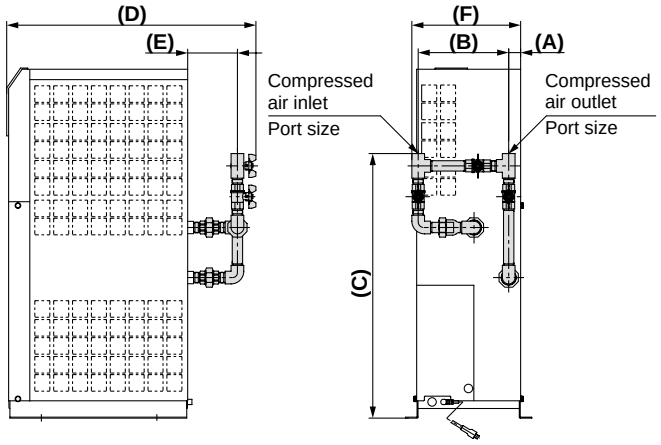

IDU55C, 75C

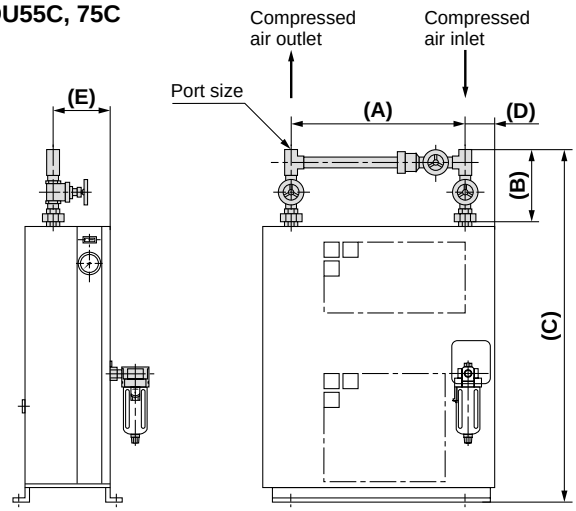

Dimensions (mm)

Part No.	Applicable dryer	Port size Rc	A	B	C	D	E	Weight (kg)
IDU-BP320	IDU8E	3/4	31	210	687	647	129	3.6
	IDU11E							
IDU-BP322	IDU15E	1	79		745	791	136	5.3

Dimensions (mm)

Part No.	Applicable dryer	Port size Rc	A	B	C	D	E
IDU-BP55C	IDU55C	2	530	325	1750	155	87
IDU-BP75C	IDU75C	2	530	325	1885	220	87

[Foundations bolt set]

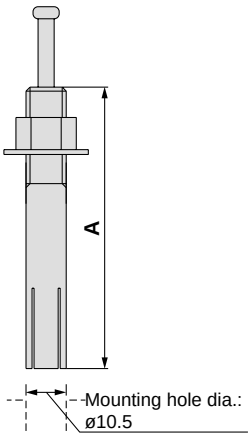

Dimensions (mm)

Part No.	Applicable dryer	Thread nominal size	Material	Number of 1 set	A
IDF-AB500	IDF4E to 75E	M10	Stainless steel	4	50
	IDU3E to 15E				
IDF-AB501	IDU22E, 37E				70

[Piping adapter]

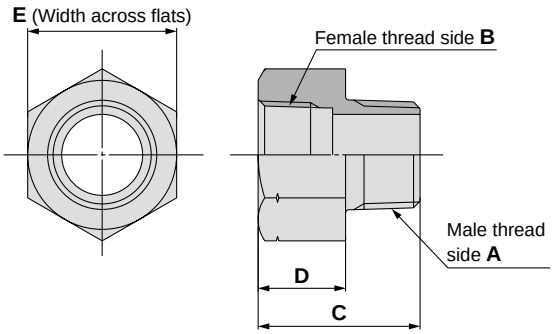

Dimensions (mm)

Part No.	Thread type and port size: Male thread side A	Thread type and port size: Female thread side B	Applicable dryer	C	D	E	Material	Number of 1 set
IDF-AP601	R 1/2	NPT 1/2	IDF4E IDU4E	38	23	26	Copper alloy	2
IDF-AP603	R 3/4	NPT 3/4	IDF6E to 11E IDU6E to 11E	43	23	32		
IDF-AP604	NPT 1	Rc 1	IDF22E, IDU22E	50	27	46		
IDF-AP605	R 1	NPT 1	IDF15E, IDU15E					
IDF-AP606	NPT 1 1/2	Rc 1 1/2	IDF37E, IDU37E	55	31	54		
IDF-AP607	NPT 2	Rc 2	IDF55E, 75E, IDU55C, 75C	65	35	70		
IDF-AP609	R 3/8	NPT 3/8	IDF1E to 3E IDU3E	30	15	22		

Data

Condensed Water Calculation

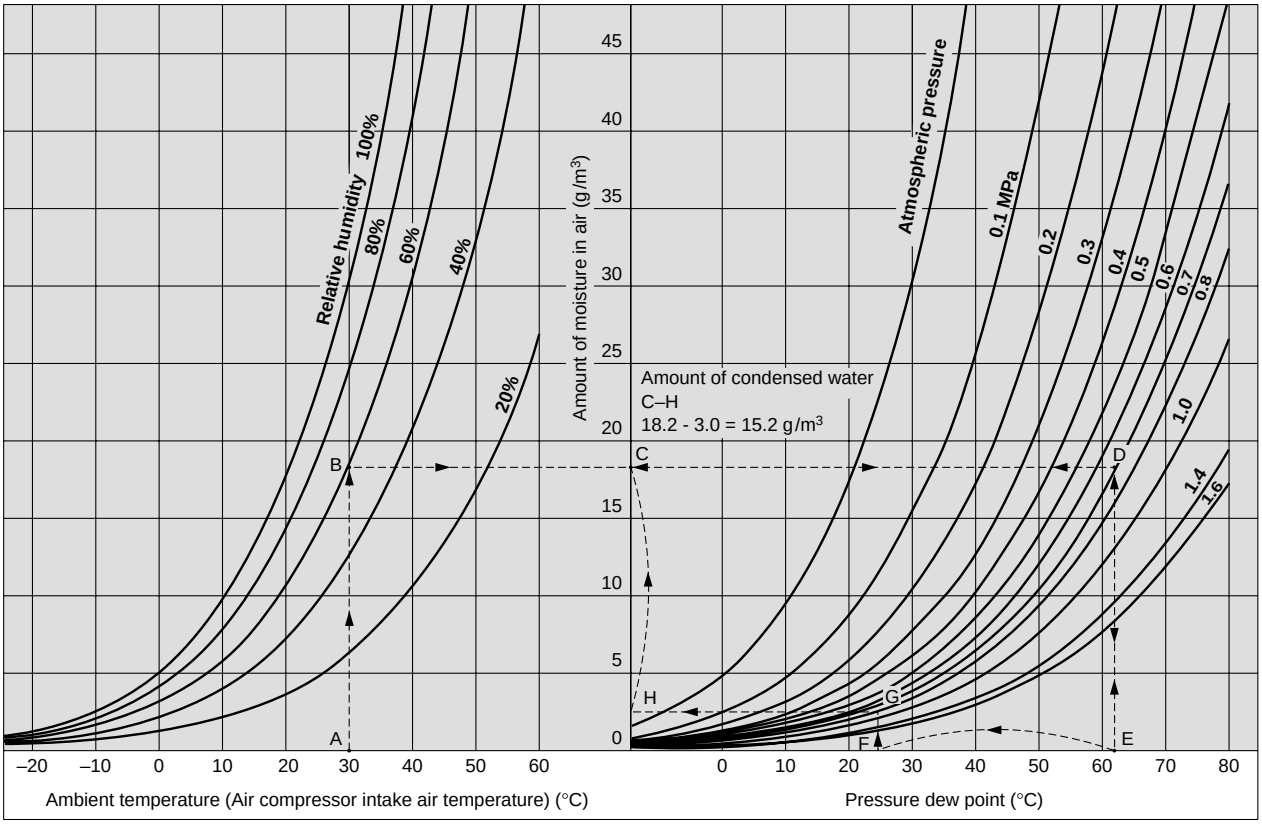

Dew Point Conversion Chart

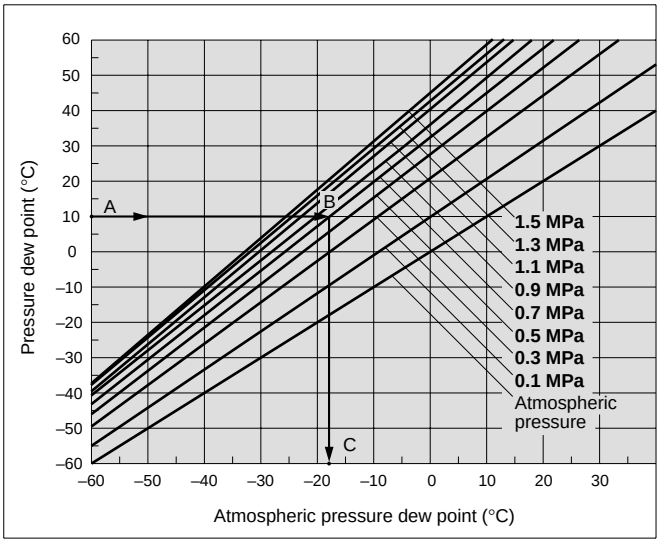

<How to read the dew point conversion chart>

Example) To obtain the atmospheric pressure dew point at a pressure dew point of 10°C, and a pressure of 0.7 MPa.

1. Trace the arrow mark →, starting from point A at a pressure dew point of 10°C to obtain the intersection B on the pressure characteristic line for 0.7 MPa.
2. Trace the arrow mark →, starting from point B to obtain the intersection C at the dew point under atmospheric pressure.
3. The intersection C is the conversion value –17°C under atmospheric pressure dew point.

<How to calculate the amount of condensed water>

Example) To obtain the amount of condensed water when the inlet air of a compressor is pressurized to 0.7 MPa then cooled down to 25°C. Given an ambient temperature of 30°C and a relative humidity of 60%.

1. Trace the arrow mark, from point A of ambient temperature 30°C to obtain the intersection B on the curved line for the relative humidity of 60%.
2. Trace the arrow mark, from the intersection B to obtain the intersection D on the curved line for the 0.7 MPa pressure characteristics.
3. Trace the intersection D to obtain the intersection E.
4. The intersection E is the dew point under pressure 0.7 MPa with an ambient temperature of 30°C and a relative humidity of 60%. The value for E is at 62°C.
5. Trace the intersection E upward, and C leftward to obtain the intersection D.
6. The intersection C is the amount of moisture included in the compressed air (1 m³ at 0.7 MPa) with a pressure dew point of 62°C. The amount of moisture is 18.2 g/m³.
7. Trace the arrow mark, starting with F for cooling temperature 25°C (pressure dew point 25°C) to obtain the intersection G on the pressure characteristic line for 0.7 MPa.
8. From the intersection G, trace the arrow mark to obtain the intersection H on the vertical axis.
9. The intersection H is the amount of moisture included in the compressed air 1 m³ at 0.7 MPa, pressure dew point of 25°C. The amount of moisture is 3.0 g/m³.
10. Therefore, the amount of condensed water is as following. (per 1 m³)
    The amount of moisture at the intersection C
    – the amount of moisture at the intersection H
    = the amount of condensed water
    18.2 – 3.0 = 15.2 g/m³

Series IDF/IDU
Safety Instructions

These safety instructions are intended to prevent a hazardous situation and/or equipment damage. These instructions indicate the level of potential hazard by labels of **"Caution", "Warning"** or **"Danger"**. To ensure safety, be sure to observe ISO 4414 Note 1), JIS B 8370 Note 2) and other safety practices.

■ Explanation of the Labels

Labels	Explanation of the labels
⚠ **Danger**	In extreme conditions, there is a possible result of serious injury or loss of life.
⚠ **Warning**	Operator error could result in serious injury or loss of life.
⚠ **Caution**	Operator error could result in injury Note 3) or equipment damage. Note 4)

Note 1) ISO 4414: Pneumatic fluid power – General rules relating to systems
Note 2) JIS B 8370: General Rules for Pneumatic Equipment
Note 3) Injury indicates light wounds, burns and electrical shocks that do not require hospitalization or hospital visits for long-term medical treatment.
Note 4) Equipment damage refers to extensive damage to the equipment and surrounding devices.

■ Selection/Handling/Applications

1. The compatibility of the pneumatic equipment is the responsibility of the person who designs the pneumatic system or decides its specifications.
Since the products specified here are used in various operating conditions, their compatibility for the specific pneumatic system must be based on specifications or post analysis and/or tests to meet the specific requirements. The expected performance and safety assurance are the responsibility of the person who has determined the compatibility of the system. This person should continuously review the suitability of all items specified, referring to the latest catalog information with a view to giving due consideration to any possibility of equipment failure when configuring a system.

2. Only trained personnel should operate pneumatically operated machinery and equipment.
Compressed air can be dangerous if handled incorrectly. Assembly, handling or repair of the systems using pneumatic equipment should be performed by trained and experienced operators. (Understanding JIS B 8370 General Rules for Pneumatic Equipment, and other safety rules are included.)

3. Do not service machinery/equipment or attempt to remove components until safety is confirmed.
1. Inspection and maintenance of machinery/equipment should only be performed once measures to prevent falling or runaway of the driven objects have been confirmed.
2. When equipment is removed, confirm the safety process as mentioned above. Turn off the supply pressure for this equipment and exhaust all residual compressed air in the system, and release all the energy (liquid pressure, spring, condenser, gravity).
3. Before machinery/equipment is restarted, take measures to prevent quick extension of a cylinder piston rod, etc.

4. If the equipment will be used in the following conditions or environment, please contact SMC first and be sure to take all necessary safety precautions.
1. Conditions and environments beyond the given specifications, or if product is used outdoors.
2. Installation on equipment in conjunction with atomic energy, railway, air navigation, vehicles, medical equipment, food and beverages, recreation equipment, emergency stop circuits, clutch and brake circuits in press applications, or safety equipment.
3. An application which has the possibility of having negative effects on people, property, requiring special safety analysis.
4. If the products are used in an interlock circuit, prepare a double interlock style circuit with a mechanical protection function for the prevention of a breakdown. And, examine the devices periodically if they function normally or not.

■ Exemption from Liability

1. SMC, its officers and employees shall be exempted from liability for any loss or damage arising out of earthquakes or fire, action by a third person, accidents, customer error with or without intention, product misuse, and any other damages caused by abnormal operating conditions.

2. SMC, its officers and employees shall be exempted from liability for any direct or indirect loss or damage, including consequential loss or damage, loss of profits, or loss of chance, claims, demands, proceedings, costs, expenses, awards, judgments and any other liability whatsoever including legal costs and expenses, which may be suffered or incurred, whether in tort (including negligence), contract, breach of statutory duty, equity or otherwise.

3. SMC is exempted from liability for any damages caused by operations not contained in the catalogs and/or instruction manuals, and operations outside of the specification range.

4. SMC is exempted from liability for any loss or damage whatsoever caused by malfunctions of its products when combined with other devices or software.

Series IDF/IDU
Specific Product Precautions 1

Be sure to read this before handling. For Air Preparation Equipment Precautions, refer to "Precautions for Handling Pneumatic Devices" (M-03-E3A).

Installation

⚠ Caution

- Avoid locations where the air dryer will be in direct contact with wind and rain. (Places where relative humidity is greater than 85%)
- Avoid exposure to direct sunlight.
- Avoid locations that contain much dust, corrosive gases, or flammable gases. Failure due to corrosion is not covered under warranty. However, when the risk of corrosion is high, select "Option C" (copper tubing with anti-corrosive treatment).
- Avoid locations of poor ventilation and high temperature.
- Too close to a wall etc. Leave sufficient room between the dryer and the wall according to the "Maintenance space" in the operation manual.
- Avoid locations where a dryer could draw in high temperature air that is discharged from an air compressor or other dryer.

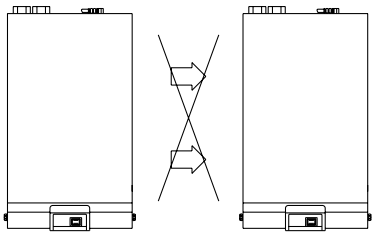

The air exhaust should not flow into the neighboring equipment.

- Avoid locations subjected to vibration.
- Avoid possible locations where the drain can freeze.
- Use the air dryer with an ambient temperature lower than 40°C.
- Avoid installation on machines for transporting, such as trucks, ships, etc.

Drain Tube

⚠ Caution

- A polyurethane tube is attached as a drain tube for the IDF1E to 75E, IDU3E to 37E, IDU55C, 75C. Use this tube to discharge drainage.
- Do not use the drain tube in an upward direction. Do not bend or crush the drain tube. (Operation of the auto drain will stop water vapor from discharging through the air outlet.)
  If it is unavoidable that the tube goes upwards, make sure it only goes as far as the position of the auto drain.

Power Supply

⚠ Caution

<100 VAC>

- Insert the power supply plug to an exclusive 100 VAC power outlet.
- Install a suitable circuit breaker [Note 1)] applicable for the specific model for the power supply.
- The voltage fluctuation should be maintained within ±10% of the rated voltage.
- Be sure to ground the power supply prior to use.
- Multiple-branch wiring is dangerous since it causes over-heating.
- Do not extend the power supply cord length using an extension cord. A voltage drop may cause the air dryer to stop operating.

Note 1) Select a circuit breaker having a sensitivity current of 30 mA and a rated current of 10 A.

<200 VAC>

- Connect the power supply to the terminal block.
- Install a suitable circuit breaker [Note 2)] applicable for the specific model.
- The voltage fluctuation should be maintained within ±10% of the rated voltage.

Note 2) Select a circuit breaker with a sensitivity current of 30 mA. As regards rated current, refer to "Applicable circuit breaker capacity" on page 4, 8, 11, 14 and 18.

When the voltage used is different than specified for a standard product, use a separately installed power transformer. (page 25)

Series IDF/IDU
Specific Product Precautions 2

Be sure to read this before handling. For Air Preparation Equipment Precautions, refer to "Precautions for Handling Pneumatic Devices" (M-03-E3A).

Air Piping

⚠ Caution

- Be careful to avoid an error in connecting the air piping at the compressed air inlet (IN) and outlet (OUT).
- Install bypass piping since it is needed for maintenance.

Use the bypass piping set on page 31 and 32.

IDF1E to 3E

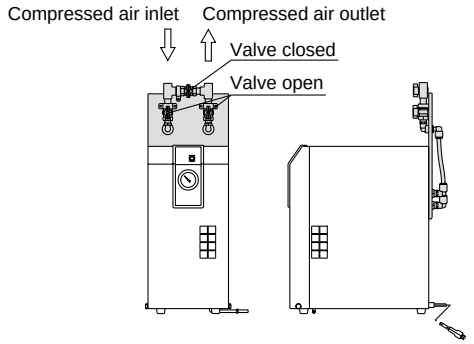

IDF4E to 15E
IDU3E to 15E

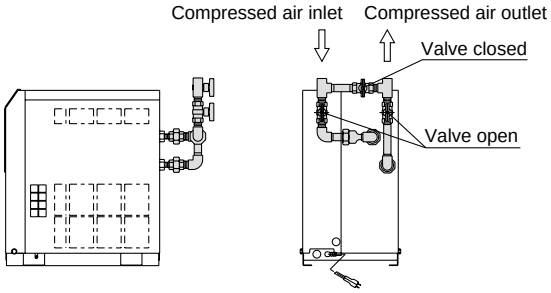

IDF22E, 37E
IDU22E

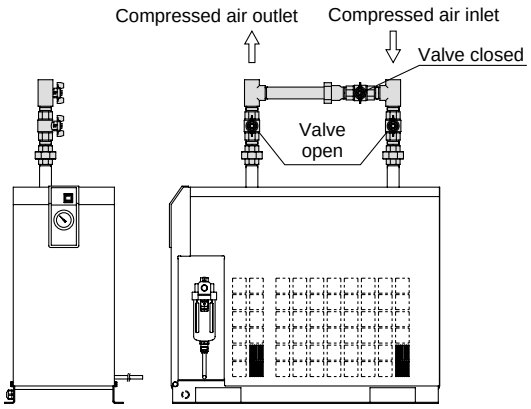

IDF55E, 75E
IDU22E, 37E

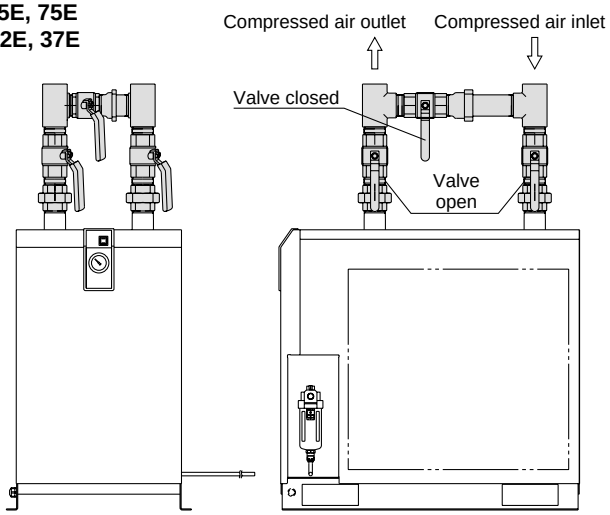

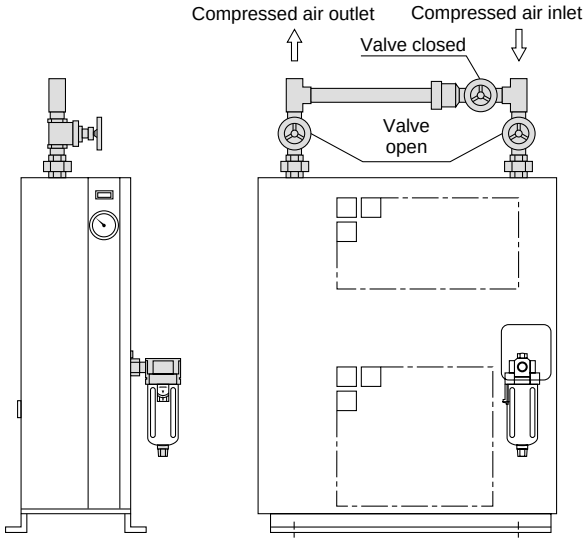

- When tightening piping at the air inlet/outlet tube, the hexagonal parts of the port on the air dryer side or piping should be held firmly with a spanner or adjustable angle wrench.
- Variations in operating conditions may cause condensation to form at the surface of the outlet piping. Apply thermal insulation around the piping to prevent condensation from forming.
- Vibration resulting from the compressor should not be transmitted through air piping to the air dryer.
- Do not allow the weight of the piping to lie directly on the air dryer.

Specific Product Precautions 3

Be sure to read this before handling. For Air Preparation Equipment Precautions, refer to "Precautions for Handling Pneumatic Devices" (M-03-E3A).

Protection Circuit

⚠ Caution

When the air dryer is operated under the following stated conditions, a protection circuit is activated, the light turns off and operation stops.

- When the compressed air temperature is too high.
- When the compressed air flow rate is too high.
- When the ambient temperature is too high. (40°C or higher)
- When the fluctuation of the power supply is beyond the rated voltage ±10%.
- When the dryer is drawing in high temperature air that is discharged from an air compressor or other dryer.
- The ventilation port is obstructed by a wall or clogged with dust.

Compressor Air Delivery

⚠ Caution

Use an air compressor with an air delivery of 100 ℓ/min or larger with the IDF2E, 3E series and the IDU3E, 4E series.

Since the auto drain of the IDF2E to 75E, IDU3E to 15E is designed in such a way that the valve remains open unless the air pressure rises to 0.1 MPa or higher, air will blow out from the drain discharge port at the time of air compressor start up until the pressure increases. Therefore, if an air compressor has a small air delivery, the pressure may not be sufficient.

Auto Drain

⚠ Caution

The auto drain may not function properly, depending on the quality of the compressed air. Check the operation once a day.

Cleaning of Ventilation Area

⚠ Caution

Remove dust from the ventilation area once a month using a vacuum cleaner or an air blow nozzle.

Time Delay for Restarting

⚠ Caution

Allow at least three minutes before restarting the dryer. If the air dryer is restarted within three minutes after being stopped, the protection circuit will be activated, operating light turns off and the dryer will not be activated.

Modifying the Standard Specifications

⚠ Caution

Do not modify the standard product using any of the optional specifications once the product has been supplied to a customer. Check the specifications carefully before selecting an air dryer.

Related Products

Membrane Air Dryer *Series IDG*

Dew point indicator for checking air drying condition at a glance
(Except IDG1)
(The IDG3, IDG5, IDG3H, IDG5H are semi-standard.)

- **Compact**
- **Lightweight**
- **Space-saving**

Fitting for discharging purge air available
Purge air can be discharged away with a tube if it should not be discharged around the membrane air dryer (semi-standard).

Discharged air noise reduced with built-in silencer
[Except IDG1, IDG3, IDG3H, IDG5, IDG5H, IDG30, IDG30H, IDG30L, IDG50, IDG50H, IDG50L]

CFC free: Environmentally friendly

No need for power supply
Power supply is not necessary at all. Saves time and effort of wiring, and no need to consider electrical standards.

No vibration nor heat discharge
No mechanically moving parts such as refrigerator

Suitable for low dew point
Outlet air atmospheric pressure dew point: –40°C
[IDG30L, IDG50L, IDG60L, IDG75L, IDG100L]
Outlet air atmospheric pressure dew point: –60°C
[IDG60S, IDG75S, IDG100S]

Outlet air flow rate 10 to 1000 ℓ/min (ANR)

Heatless Air Dryer *Series ID*

Heatless type ID series is ideal for applications that require dry air with low dew point.

Supplies dry air with low dew condensation point of –30°C or less.

Small and light without heater and electric control panel

Possible to check outlet dew point with indicator
(Self-regenerative style allows easy maintenance.)

Outlet air flow rate 80 to 780 ℓ/min (ANR)

Air Dryers Compliant to Overseas Standards

Refrigerated Air Dryer *Series IDFA□E*

For Use in EU and Southeast Asia

EC Directive compliant (with CE marking)

Power supply voltage:
Single-phase 230 VAC (50 Hz)

Refrigerant: R134a (HFC)
R407C (HFC)
Coefficient of destruction for ozone is zero.

Improved corrosion resistance with the use of stainless steel, plate type heat exchanger
［IDFA4E to 75E］

Series	Air flow capacity (m^3/h) [ANR] Outlet air pressure dew point			Refrigerant	Rated inlet condition	Port size
	3°C	7°C	10°C			
IDFA3E	12	15	17	**R134a (HFC)**	35°C, 0.7 MPa	Rc 3/8
IDFA4E	24	31	34			Rc 1/2
IDFA6E	36	46	50			Rc 3/4
IDFA8E	65	83	91			
IDFA11E	80	101	112			
IDFA15E	120	152	168			Rc 1
IDFA22E	182	231	254	**R407C (HFC)**		R 1
IDFA37E	273	347	382			R 1 1/2
IDFA55E	390	432	510			R 2
IDFA75E	660	720	822			

Refrigerated Air Dryer *Series IDFB□E*

For Use in North, Central & South America

UL certified

Power supply voltage:
Single-phase 115 VAC (60 Hz)
230 VAC (60 Hz)

Refrigerant: R134a (HFC)
Coefficient of destruction for ozone is zero.

Improved corrosion resistance with the use of stainless steel, plate type heat exchanger
［IDFB4E to 37E］

Series	Air flow capacity SCFM (m^3/h) [ANR] Outlet air pressure dew point			Refrigerant	Rated inlet condition	Port size
	37°F (2.8°C)	45°F (7.2°C)	50°F (10°C)			
IDFB3E	10 (17)	11 (19)	12 (20)	**R134a (HFC)**	100°F (37.8°C) 100 psig (0.7 MPa)	NPT 3/8
IDFB4E	15 (25)	16 (27)	17 (28)			NPT 1/2
IDFB6E	25 (43)	26 (45)	28 (47)			NPT 3/4
IDFB8E	41 (70)	43 (74)	45 (77)			
IDFB11E	59 (100)	62 (106)	65 (110)			
IDFB15E	71 (120)	80 (136)	86 (147)			NPT1
IDFB22E	107 (182)	120 (205)	130 (221)			
IDFB37E	161 (273)	173 (294)	181 (308)			NPT 1 1/2

∗ See separate catalog for dryer models conforming with foreign standards (CE and UL).

Back page 6

Record of changes		
B edition	∗ Addition of Refrigerated Air Dryer, IDF15E/22E/37E, IDU8E/11E/15E. ∗ Option H: Deletion of For medium air pressure (Auto drain bowl type: Metal bowl). ∗ Standard specifications: Addition of the compressor intake condition to the Air flow capacity. ∗ Number of pages 20 to 24.	JZ
C edition	∗ Addition of Refrigerated Air Dryer, IDF55E/75E. ∗ Addition of Piping Adapter to Optional Accessories. ∗ Number of pages 24 o 32.	KV
D edition	∗ Addition of Refrigerated Air Dryer, IDF120D to 240D, IDF370B. ∗ Addition of Refrigerated Air Dryer, IDU22E/37E, IDU55C/75C. ∗ Number of pages from 32 to 44.	LS

⚠ **Safety Instructions**	Be sure to read “Precautions for Handling Pneumatic Devices” (M-03-E3A) before using.

SMC Corporation

Akihabara UDX 15F,
4-14-1, Sotokanda, Chiyoda-ku, Tokyo 101-0021, JAPAN
Phone: 03-5207-8249 FAX: 03-5298-5362
URL http://www.smcworld.com

D-DN 1st printing IU printing LS 120DN Printed in Japan.

This catalog is printed on recycled paper with concern for the global environment.